INSTRUCTION MANUAL

CS511-L Dissolved Oxygen Probe

Revision: 1/13

Copyright © 2001-2013
Campbell Scientific, Inc.

Warranty

"PRODUCTS MANUFACTURED BY CAMPBELL SCIENTIFIC, INC. are warranted by Campbell Scientific, Inc. ("Campbell") to be free from defects in materials and workmanship under normal use and service for twelve (12) months from date of shipment unless otherwise specified in the corresponding Campbell pricelist or product manual. Products not manufactured, but that are re-sold by Campbell, are warranted only to the limits extended by the original manufacturer. Batteries, fine-wire thermocouples, desiccant, and other consumables have no warranty. Campbell's obligation under this warranty is limited to repairing or replacing (at Campbell's option) defective products, which shall be the sole and exclusive remedy under this warranty. The customer shall assume all costs of removing, reinstalling, and shipping defective products to Campbell. Campbell will return such products by surface carrier prepaid within the continental United States of America. To all other locations, Campbell will return such products best way CIP (Port of Entry) INCOTERM® 2010, prepaid. This warranty shall not apply to any products which have been subjected to modification, misuse, neglect, improper service, accidents of nature, or shipping damage. This warranty is in lieu of all other warranties, expressed or implied. The warranty for installation services performed by Campbell such as programming to customer specifications, electrical connections to products manufactured by Campbell, and product specific training, is part of Campbell's product warranty. CAMPBELL EXPRESSLY DISCLAIMS AND EXCLUDES ANY IMPLIED WARRANTIES OF MERCHANTABILITY OR FITNESS FOR A PARTICULAR PURPOSE. Campbell is not liable for any special, indirect, incidental, and/or consequential damages."

Assistance

Products may not be returned without prior authorization. The following contact information is for US and international customers residing in countries served by Campbell Scientific, Inc. directly. Affiliate companies handle repairs for customers within their territories. Please visit *www.campbellsci.com* to determine which Campbell Scientific company serves your country.

To obtain a Returned Materials Authorization (RMA), contact CAMPBELL SCIENTIFIC, INC., phone (435) 227-9000. After an applications engineer determines the nature of the problem, an RMA number will be issued. Please write this number clearly on the outside of the shipping container. Campbell Scientific's shipping address is:

CAMPBELL SCIENTIFIC, INC.
RMA#_____
815 West 1800 North
Logan, Utah 84321-1784

For all returns, the customer must fill out a "Statement of Product Cleanliness and Decontamination" form and comply with the requirements specified in it. The form is available from our web site at *www.campbellsci.com/repair*. A completed form must be either emailed to *repair@campbellsci.com* or faxed to (435) 227-9106. Campbell Scientific is unable to process any returns until we receive this form. If the form is not received within three days of product receipt or is incomplete, the product will be returned to the customer at the customer's expense. Campbell Scientific reserves the right to refuse service on products that were exposed to contaminants that may cause health or safety concerns for our employees.

Table of Contents

PDF viewers: These page numbers refer to the printed version of this document. Use the PDF reader bookmarks tab for links to specific sections.

1. Introduction 1

2. Cautionary Statements 2

3. Initial Inspection 2

3.1 Shipping Kit and Accessories 2
3.1.1 Shipping Kit 2
3.1.2 Optional Probe Accessories 2

4. Quickstart 3

4.1 Getting Probe Ready to Use 3
4.2 Use SCWin to Program Datalogger and Generate Wiring Diagram 5
4.3 Mount Probe 8

5. Overview 8

6. Specifications 9

7. Operation 11

7.1 Wiring 11
7.2 Programming 11
7.2.1 CRBasic 11
7.2.1.1 Example CR1000 Program Using VoltDiff 12
7.2.1.2 Example CR200(X) Program 13
7.2.2 Edlog 14
7.2.2.1 Portion of CR10X Sample Program Using P1 14
7.2.2.2 Portion of CR10X Sample Program Using P2 14
7.3 Calibration 14

8. Maintenance 16

8.1 Cleaning Probe and Replacing the Membrane 16

Appendices

A. Dissolved Oxygen Tables A-1

B. Sensorex's Model DO6200/T B-1

B.1 DO6200/T Specifications B-1
B.2 Accessories for DO6200/T B-2

C. PT4-L Agitator C-1

C.1 Description C-1
C.2 PT4-L Specifications C-2
C.3 Agitator Control C-2

Figures

1-1. The CS511-L is currently Sensorex's DO6400/T (left). The DO6200/T (right) was shipped prior to June 2008 (refer to Appendix B) 1
8-1. Separate the lower body from the upper body 16
8-2. Remove membrane and O-ring 17
8-3. Using a toothbrush to clean probe 18
8-4. Proper O-ring placement 19
8-5. Installing membrane 20
8-6. Check for leakage 21
B-1. Sensorex's model DO6200/T B-1
C-1. Preventing Bio-fouling of a DO Sensor C-1
C-2. DO sensor with PT4 Agitator C-2
C-3. Agitator Wiring C-3

Tables

7-1. Sensor Wiring 11
7-2. Wiring for Example 1 12
7-3. Wiring for Example 2 13

CS511-L Dissolved Oxygen Probe

1. Introduction

The CS511 is a rugged, low-maintenance sensor that is manufactured by Sensorex. It consists of a self-polarizing galvanic cell that generates a millivolt signal proportional to the amount of oxygen present in the measured medium (typically water).

Before installing the CS511, please study

- Section 2, *Cautionary Statements*
- Section 3, *Initial Inspection*
- Section 3.1, *Quickstart*

NOTE Currently, the CS511 is Sensorex's Model DO6400/T. Prior to June 2008, the CS511 was Sensorex's Model DO6200/T. Programming, wiring, and most specifications are the same for these two sensors. However, they use different accessories and look different (see FIGURE 1-1). Refer to Appendix B if you have Sensorex's Model DO6200/T.

FIGURE 1-1. The CS511-L is currently Sensorex's DO6400/T (left). The DO6200/T (right) was shipped prior to June 2008 (refer to Appendix B).

2. Cautionary Statements

- The CS511 is a precision instrument. Please handle it with care.
- Because the CS511 is shipped dry, electrolyte needs to be added before using the probe (see Section 4.1, *Getting Probe Ready to Use*).
- Letting the CS511 dry up shortens the life of the membrane and probe.
- Drain the solution from the CS511 before storing it out of water.
- Replace the membrane and recalibrate the probe before redeploying the CS511 after it has been stored out of water or dried up in the field.

3. Initial Inspection

- Upon receipt of the CS511, inspect the packaging and contents for damage. File damage claims with the shipping company.
- Immediately check package contents against the shipping documentation (see Section 3.1, *Shipping Kit and Accessories*). Contact Campbell Scientific about any discrepancies.
- The model number and cable length are printed on a label at the connection end of the cable. Check this information against the shipping documents to ensure the expected product and cable length are received.

3.1 Shipping Kit and Accessories

NOTE Except for the agitator, these items are for Sensorex's DO6400/T. Refer to Appendix B if you have a DO6200/T.

3.1.1 Shipping Kit

(1) Membrane replacement tool
(1) Bottled DO electrolyte, 250 ml
(2) Teflon membranes
(2) Membrane O-rings
(2) Membrane spaces

3.1.2 Optional Probe Accessories

- PT4─L Agitator with Repeat Cycle Timer for stagnant conditions (see Appendix C)
- 22261 Maintenance Kit containing (5) Teflon membranes, (5) membrane O-rings, (5) tensioning washers, and a 250-ml bottle of electrolyte
- 22262 Maintenance Kit containing (25) Teflon membranes, (25) membrane O-rings, (25) tensioning washers, and a 500-ml bottle of electrolyte
- 22263 Spare Parts Kit containing (2) membrane locks, (2) tensioning washers, (2) body O-rings, and (1) membrane-replacement tool

4. Quickstart

Please review Section 7, *Operation*, for wiring, programming, and calibration information.

4.1 Getting Probe Ready to Use

1. Unscrew the lower body from the upper body.

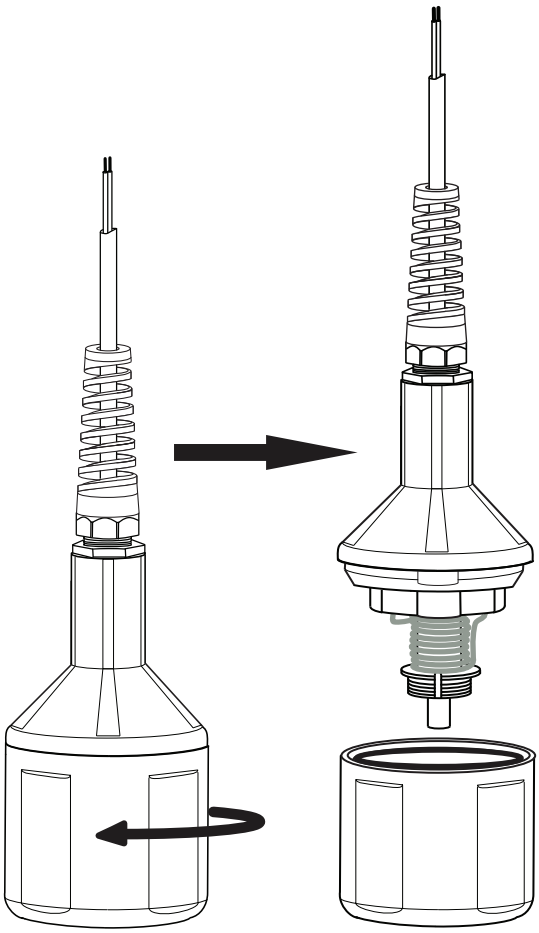

2. Inspect the membrane for wrinkles. Replace membrane if wrinkled (see Section 8.1, *Cleaning Probe and Replacing the Membrane*).

3. Pour clean water into the lower body and look for leakage around the membrane. Dispose of the water, and if there is leakage, replace membrane (see Section 8.1, *Cleaning Probe and Replacing the Membrane*).

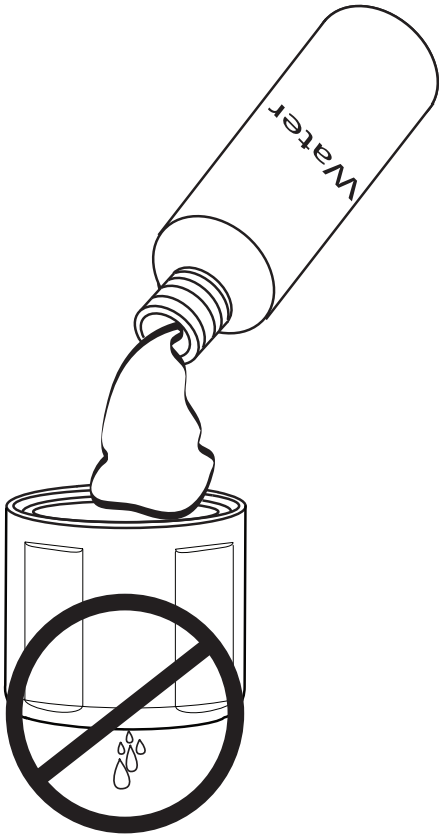

4. Pour fresh electrolyte in the bottom cap and fill to the top of the cap.

5. Keep the probe upright with the cable pointed upwards (not sideways). Screw the bottom cap onto the upper body until hand tight.

NOTE Excess electrolyte will leak out at the joint between the probe's cap and upper body.

4.2 Use SCWin to Program Datalogger and Generate Wiring Diagram

The simplest method for programming the datalogger to measure the 034B is to use Campbell Scientific's SCWin Program Generator.

1. Open Short Cut and click on **New Program**.

2. Select the datalogger and enter the scan interval.

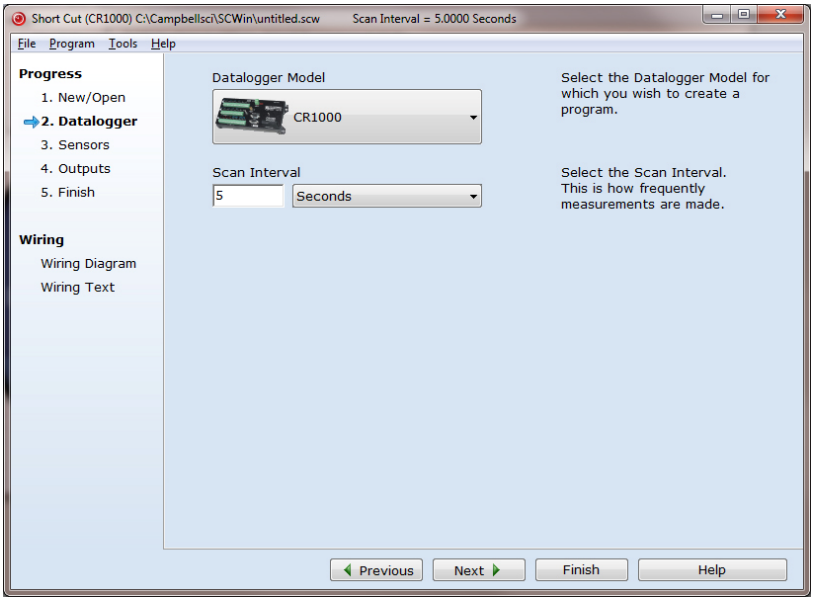

3. Select **CS511 Dissolved Oxygen Probe,** and select the **right arrow** (in center of screen) to add it to the list of sensors to be measured, and then select **Next**.

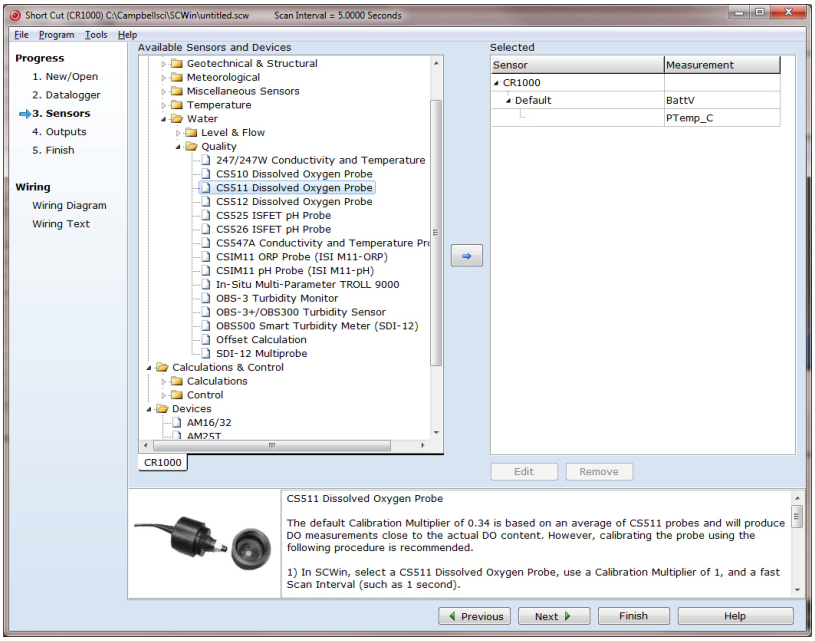

4. Define the name of the public variables and enter the calibration multiplier. Variables default to **DOmv** for the millivolt measurements and **DOppm** for the ppm values. The default calibration value of 0.34 is based on an average. It is preferable to calibrate the probe using the procedure provided in Section 7.3, *Calibration*. After entering the information, click on **OK**, and then select **Next**.

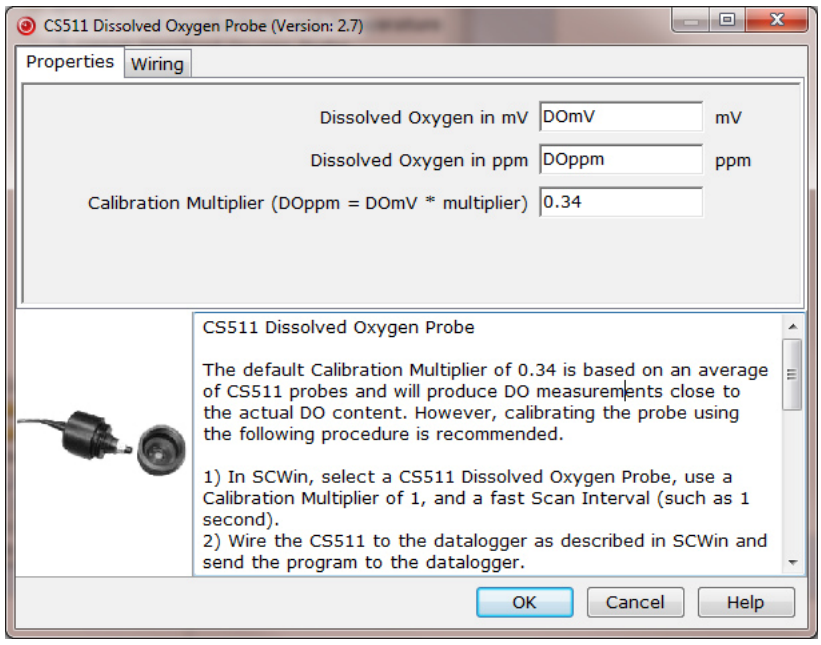

5. Choose the outputs and then select **Finish**.

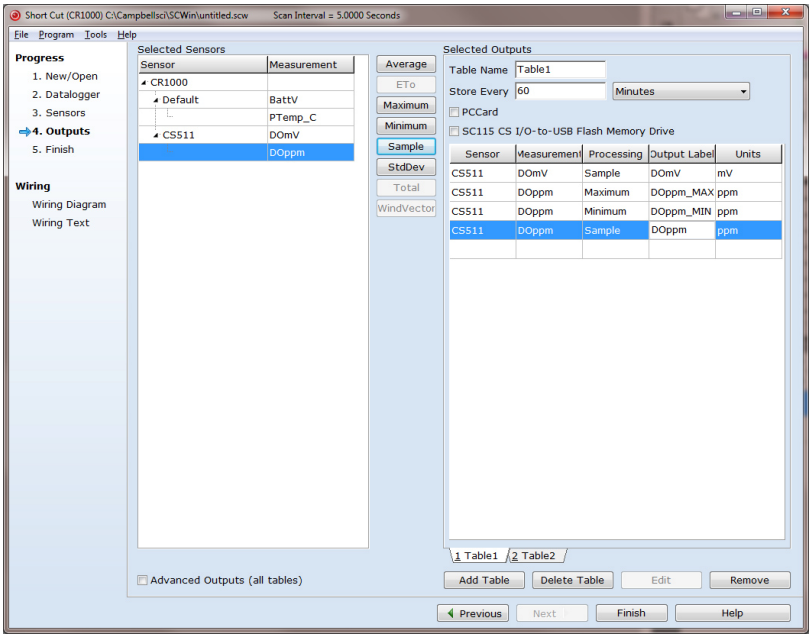

6. In the Save As window, enter an appropriate file name and select **Save**.

7. In the Confirm window, click **Yes** to download the program to the datalogger.

8. Click on **Wiring Diagram** and wire according to the wiring diagram generated by SCWin Short Cut.

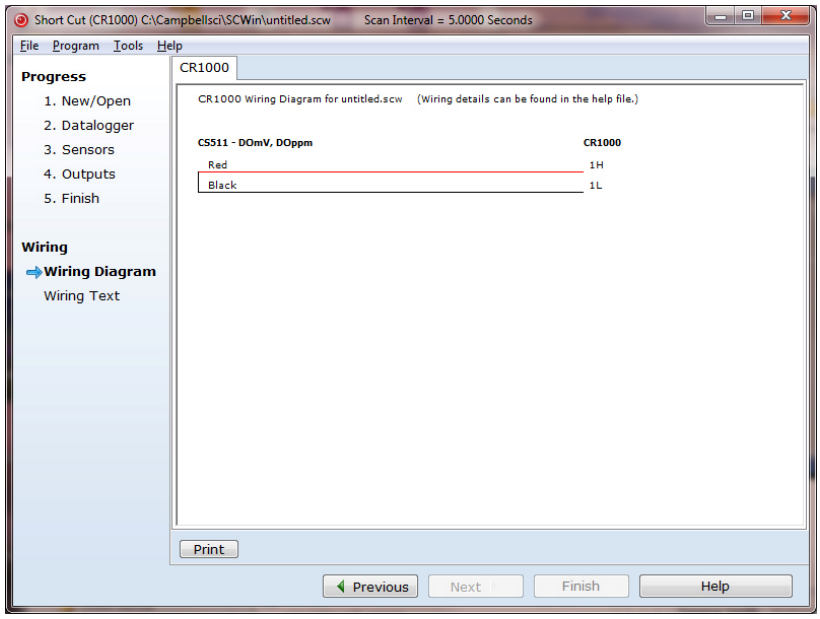

NOTE Campbell Scientific also recommends connecting the shield wire to ground.

4.3 Mount Probe

Mount the CS511 in water at a slight angle, which prevents bubbles from becoming trapped on the membrane.

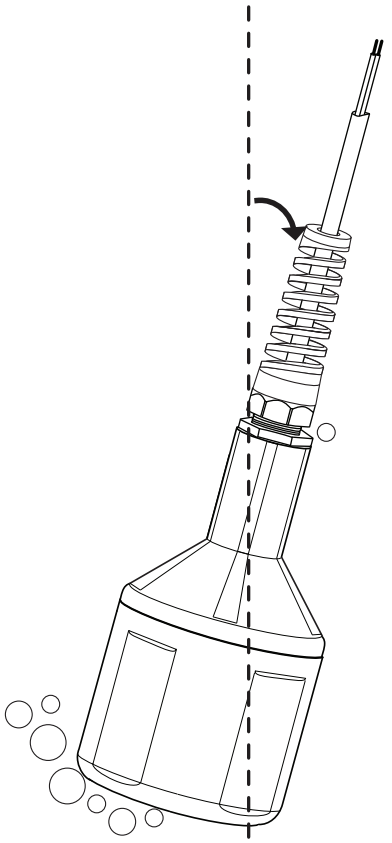

5. Overview

The CS511 is a galvanic probe which produces a millivolt signal proportional to the amount of oxygen present in the measured medium. Oxygen diffuses through the membrane onto the cathode, reacts chemically, and combines with the anode. An electrical current is produced by this chemical reaction which is converted from microamps to millivolts by an in-line resistor. An in-line thermistor also conditions the signal providing automatic temperature compensation. With these features, the probe produces a linear, millivolt output proportional to the oxygen present in the medium in which it is placed.

The probe consists of two parts, an upper part with cathode, anode, and cable, and a lower part comprising of a screw-on membrane cap. The probe is shipped dry, but has a membrane installed in the cap. With the membrane in place, the cap must be filled with electrolyte solution before the cap is screwed onto the top component.

The probe is self-polarizing and requires no external power source.

The probe's robust construction and simple design make maintenance and servicing it straightforward. There is no need to send the probe back to the factory for servicing. It uses a strong, easy-to-clean, and easy-to-change

membrane in a screw-on membrane cap. Regular servicing is not required. When necessary, the probe can be fully overhauled in five min.

The CS511's cable can terminate in:

- Pigtails that connect directly to a Campbell Scientific datalogger (option –PT).
- Connector that attaches to a prewired enclosure (option –PW). Refer to *www.campbellsci.com/prewired-enclosures* for more information.
- Connector that attaches to a CWS900 Wireless Sensor Interface (option –CWS). The CWS900 allows the probe to be used in a wireless sensor network. Refer to *www.campbellsci.com/cws900* for more information.

6. Specifications

Features:

- In-line thermistor provides automatic temperature compensation
- Agitator available that keeps the probe clean and moves water across membrane for more accurate readings
- Compatible with all Campbell Scientific dataloggers

Compatible Dataloggers:	CR200(X)-series CR800 series CR1000 CR3000 CR5000 CR9000X CR510 CR10(X) CR23X CR7 21X
Principle of Measurement:	Membrane-covered, galvanic oxygen probe
Output Signal:	33 mV ± 9 mV (100% saturation), < 2 mV (0% saturation)
Accuracy:	Better than ± 2% of reading ± 1 digit when calibration temperature equals measuring temperature ± 5°C
Response Time:	5 min. from 100% to 0% oxygen
Materials of Construction:	
Body:	Noryl
Anode:	Silver
Cathode:	Zinc
Diameter:	5.72 cm (2.25 in)
Height:	17.78 cm (7 in) from bottom of sensor to end of cable-strain relief

Shipping Weight	0.8 kg (1.75 lb)
Cable Jacket Material:	PVC
Operating Conditions:	
Temperature	0° to 50°C (32° to 122°F)
Pressure:	0 to 100 psig
Minimum Submersion Depth:	60 mm (2.5 in)
Minimum Water Flow:	5 cm/s (2 in/sec) across membrane
Calibration:	In air or in air saturated water
Temperature Compensation:	Automatic from 4° to 40°C (40° to 104°F)
Range of Dissolved Oxygen:	0.5 to 50 ppm
Probe Electrolyte:	NaCl + glycerol (prevents freezing)

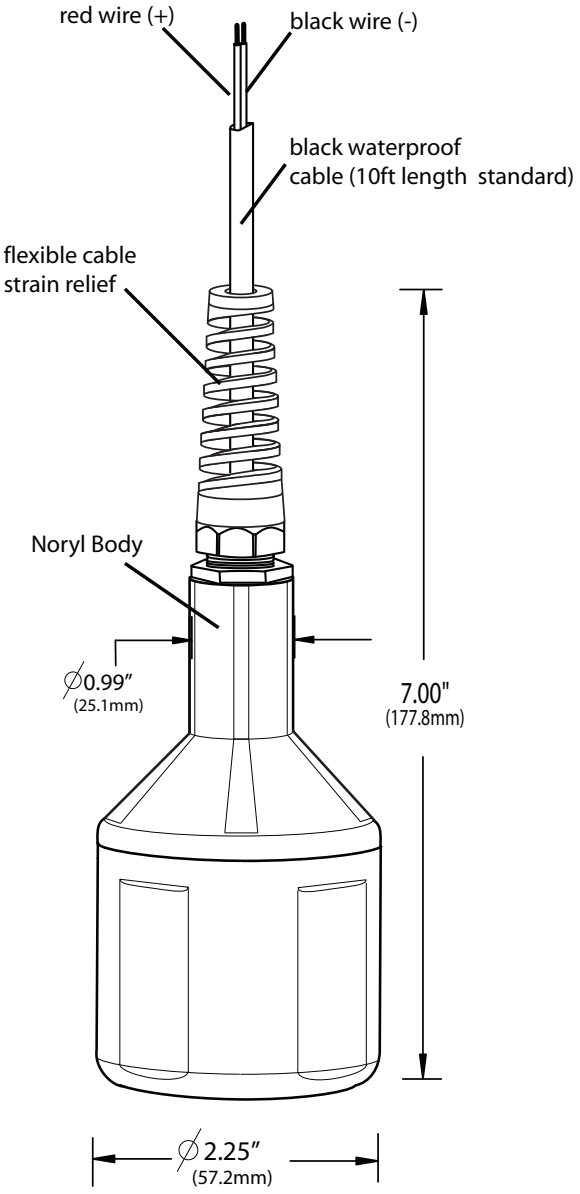

7. Operation

7.1 Wiring

The CS511 can use one differential channel or one single-ended channel. Differential wiring is better at rejecting electrical noise and ground loop error.

TABLE 7-1. Sensor Wiring

Color	Function	CR510, CR10X, CR800, CR850, CR23X, CR1000, CR3000, CR5000	CR200(X)-Series
White	Signal +	Differential High, or Single-Ended Channel	Single-Ended Channel
Black	Signal -	Differential Low or AG	Ground
Clear	Shield	Ground	Ground

7.2 Programming

NOTE This section describes using CRBasic or Edlog to program the datalogger. See Section 4.2, *Use SCWin to Program Datalogger and Generate Wiring Diagram*, if using Short Cut.

Dataloggers that use CRBasic include the CR200(X)-series, CR800, CR850, CR1000, CR3000, and CR5000. Dataloggers that use Edlog include the CR510, CR10X, and CR23X. CRBasic and Edlog are included with LoggerNet and PC400 software.

7.2.1 CRBasic

In the CR800, CR850, CR1000, CR3000, and CR5000, **VoltDiff()** or **VoltSE()** can be used to measure the CS511. In the CR200(X)-series dataloggers, only the **VoltSE()** instruction can be used since these dataloggers do not support differential measurements. Example programs are provided in Section 7.2.1.1, *Example CR1000 Program Using VoltDiff*, and Section 7.2.1.2, *Example CR200(X) Program*.

7.2.1.1 Example CR1000 Program Using VoltDiff

This example is a CR1000 program but programming for the CR800, CR850, CR3000, and CR5000 is similar. TABLE 7-2 shows the wiring for the example.

TABLE 7-2. Wiring for CR1000 Example

CR1000 Connection	Sensor Wire
1H	White
1L	Black
Ground	Clear

```
'CR1000

'Declare Variables and Units
Public Batt_Volt
Public DOmV
Public DOppm

Units Batt_Volt=Volts
Units DOmV=mV
Units DOppm=ppm

'Define Data Tables
DataTable(Table1,True,-1)
    DataInterval(0,60,Min,10)
    Sample(1,DOmV,FP2)
    Sample(1,DOppm,FP2)
    Sample(1,Batt_Volt,FP2)
EndTable

DataTable(Table2,True,-1)
    DataInterval(0,1440,Min,10)
    Minimum(1,Batt_Volt,FP2,False,False)
EndTable

'Main Program
BeginProg
    Scan(5,Sec,1,0)
        'Default Datalogger Battery Voltage measurement Batt_Volt:
        Battery(Batt_Volt)
        'CS511 Dissolved Oxygen Probe measurements DOmV and DOppm:
        VoltDiff(DOmV,1,mV250,1,True,0,_60Hz,1,0)
        DOppm=DOmV*0.34
        'Call Data Tables and Store Data
        CallTable(Table1)
        CallTable(Table2)
    NextScan
EndProg
```

7.2.1.2 Example CR200(X) Program

The CR200(X)-series must use the **VoltSE()** instruction since these dataloggers do not make differential measurements. If the other CRBasic dataloggers use the **VoltSE()** instruction instead of the **VoltDiff()** instruction, their programming will be similar to this example. TABLE 7-3 shows the wiring for the example.

TABLE 7-3. Wiring for CR200(X) Example

CR200(X) Connection	Sensor Wire
SE1	White
Ground	Black
Ground	Clear

```
'CR200(X) Series

'Declare Variables and Units
Public Batt_Volt
Public DOmV
Public DOppm

Units Batt_Volt=Volts
Units DOmV=mV
Units DOppm=ppm

'Define Data Tables
DataTable(Table1,True,-1)
    DataInterval(0,60,Min)
    Sample(1,DOmV)
EndTable

DataTable(Table2,True,-1)
    DataInterval(0,1440,Min)
    Minimum(1,Batt_Volt,False,False)
EndTable

'Main Program
BeginProg
    Scan(10,Sec)
        'Default Datalogger Battery Voltage measurement Batt_Volt:
        Battery(Batt_Volt)
        'CS511 Dissolved Oxygen Probe measurements DOmV and DOppm:
        VoltSE(DOmV,1,1,1,0)
        DOppm=DOmV*0.34
        'Call Data Tables and Store Data
        CallTable(Table1)
        CallTable(Table2)
    NextScan
EndProg
```

7.2.2 Edlog

In Edlog, P1 is used for single-ended measurements, and P2 is used for differential measurements. Section 7.2.2.1, *Portion of CR10X Sample Program Using P1*, and Section 7.2.2.2, *Portion of CR10X Sample Program Using P2*, provide examples.

7.2.2.1 Portion of CR10X Sample Program Using P1

NOTE The example measurement instructions that follow do not store data to final storage. Additional instructions (typically P92, P77, and output processing instructions such as P70) are required to store data permanently.

```
1:  Volt (SE) (P1)
   1:   1          Reps
   2:   24         250 mV 60 Hz Rejection Range   ; code 23 used for CR23X
   3:   1          SE Channel
   4:   1          Loc [ DOmV     ]
   5:   1.0        Multiplier                    *See Calibration*
   6:   0.0        Offset
```

7.2.2.2 Portion of CR10X Sample Program Using P2

NOTE The example measurement instructions that follow do not store data to final storage. Additional instructions (typically P92, P77, and output processing instructions such as P70) are required to store data permanently.

```
1:  Volt (Diff) (P2)
   1:   1          Reps
   2:   24         250 mV 60 Hz Rejection Range   ; code 23 used for CR23X
   3:   1          DIFF Channel
   4:   1          Loc [ DOmV     ]
   5:   1.0        Multiplier                    *See Calibration*
   6:   0.0        Offset
```

7.3 Calibration

The multiplier is used to calibrate the CS511 probe. To calculate the multiplier:

1) Program the datalogger using a multiplier of one (see Section 4.2, *Use SCWin to Program Datalogger and Generate Wiring Diagram*, or Section 7.2, *Programming*).

2) Wire the CS511 to the datalogger (see wiring diagram generated by SCWin or see Section 7.1, *Wiring*).

3) If the CS511 has been deployed in the field, gently wipe the membrane with a soft cloth.

4) Place the CS511 in air away from direct sunlight with the membrane facing upward.

5) Place a drop of clean water on the membrane.

6) Wait for readings to stabilize. This may take 15 minutes or more.

7) Determine the air temperature and barometric pressure.

8) Using a calibration chart such as that provided in Appendix A, determine the oxygen concentration of the air.

9) Use the following equation to calculate the multiplier:

   M = P/R

   where:
   M = Multiplier
   P = Concentration in PPM of the air (from the calibration chart)
   R = The signal output of the probe when using a multiplier of one

10) Change the multiplier in the datalogger program from one to the calculated number (see Section 4.2, *Use SCWin to Program Datalogger and Generate Wiring Diagram*, or Section 7.2, *Programming*).

Instead of step 10, the multiplier can be entered using a separate instruction in the program. This will allow a new multiplier to be added to the program without rewriting, compiling, and downloading the program to the datalogger.

For this method, CRBasic dataloggers can use the following expression. The multiplier value is entered into the expression through the Public Table using the numeric display in PC200W, LoggerNet, PC400, PConnect, PConnectCE, or datalogger keyboard display.

CRBasic Expression for Entering Multiplier:

```
DOppm = DOMult * DOmV
```

Edlog dataloggers use Instruction 36. The multiplier is entered into an input location called DOmult using the numeric display in PC200W, PC208W, LoggerNet, PC400, PConnect, PConnectCE, or the datalogger keyboard display.

Edlog Instruction 36 for Entering Multiplier:

```
57:  Z=X*Y (P36)
   1:   1              X Loc [ DOmV       ]
   2:   2              Y Loc [ DOmult     ]
   3:   3              Z Loc [ DOppm      ]
```

8. Maintenance

The only maintenance required is regular cleaning and replacement of the membrane (see below).

8.1 Cleaning Probe and Replacing the Membrane

1. Unscrew the lower body from the upper body (FIGURE 8-1).

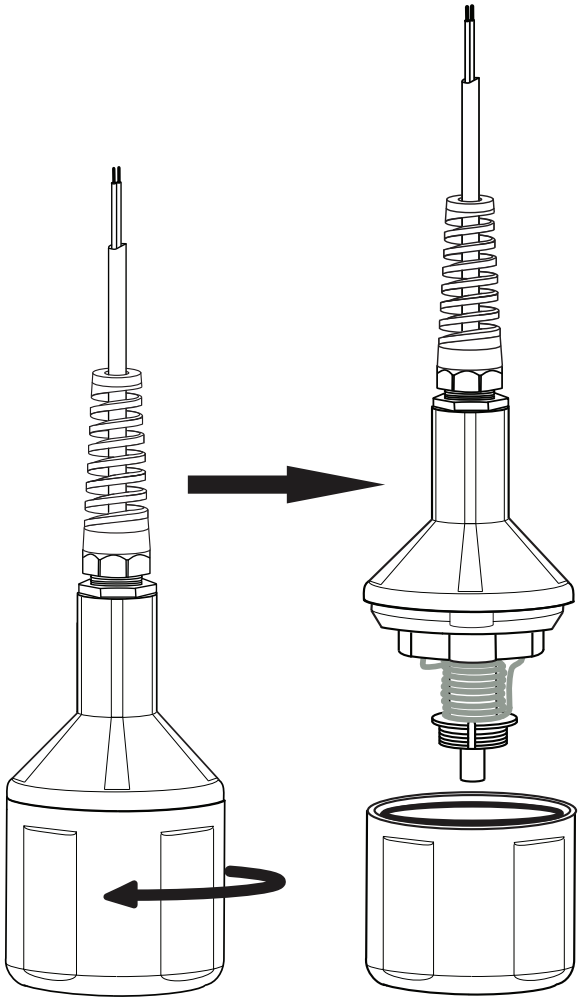

FIGURE 8-1. Separate the lower body from the upper body

2. Safely dispose of the electrolyte. Make sure the cap's O-ring does not fall out of the cap.

3. Using the membrane tool, unscrew the membrane lock that is in the lower body (see FIGURE 8-2).

4. Remove and dispose of the membrane and its O-ring as show in FIGURE 8-2.

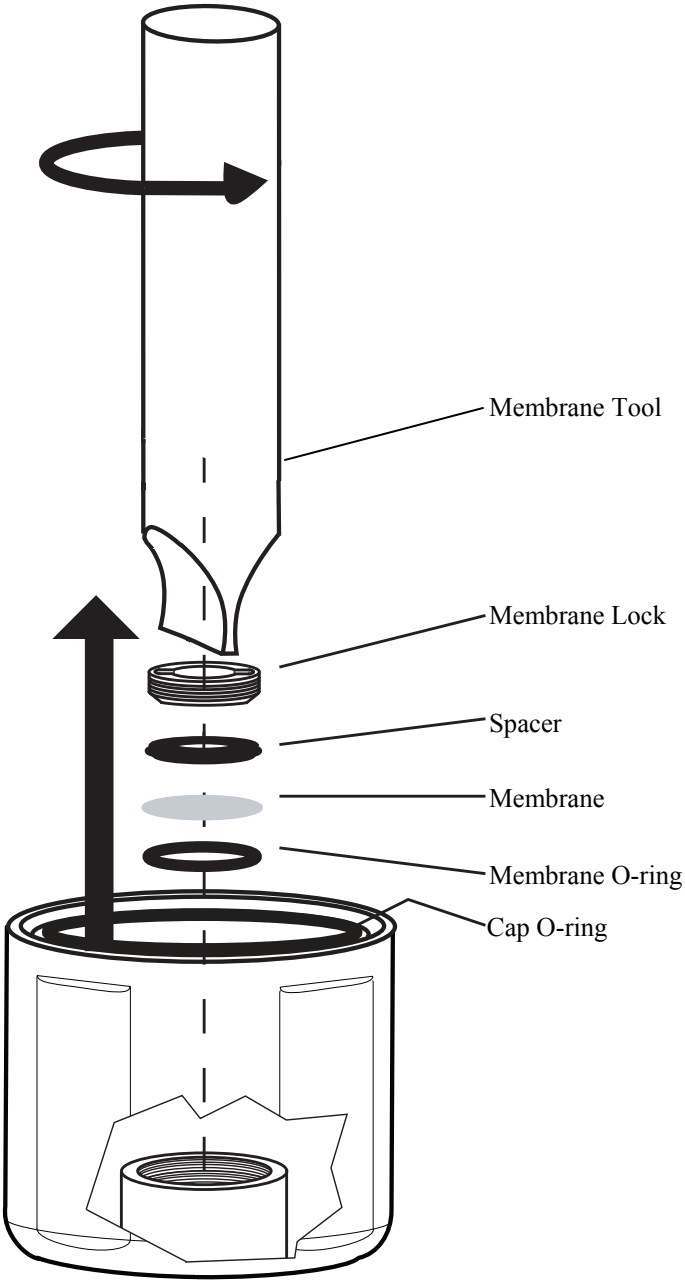

FIGURE 8-2. Remove membrane and O-ring

5. To clean, immerse the top part of the sensor in distilled white vinegar (3% acetic acid) for about 30 min. If vinegar is unavailable, use a soft toothbrush, automatic dishwasher detergent, and clean water to clean the cathode, anode, and plastic. Rinse all components thoroughly with clean water after cleaning (see FIGURE 8-3).

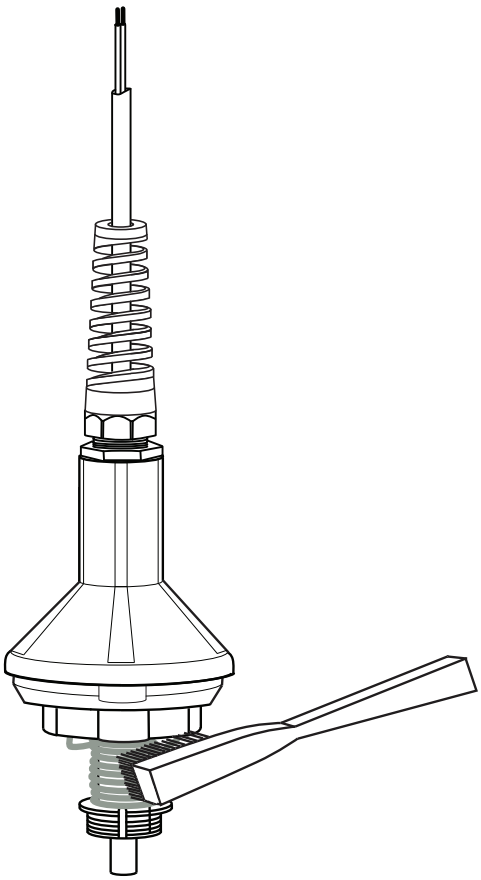

FIGURE 8-3. Using a toothbrush to clean probe

6. Replace the membrane and its O-ring by first placing the new O-ring at the very bottom of the membrane cavity (see FIGURE 8-4). Remove the paper backing from a new membrane and place the new membrane on top of the O-ring, and then place the spacer on top of the membrane. Using the membrane tool, install the membrane lock on top of the spacer as shown in FIGURE 8-5. Make sure the cap is upright (not sideways) when securing the membrane lock to the spacer.

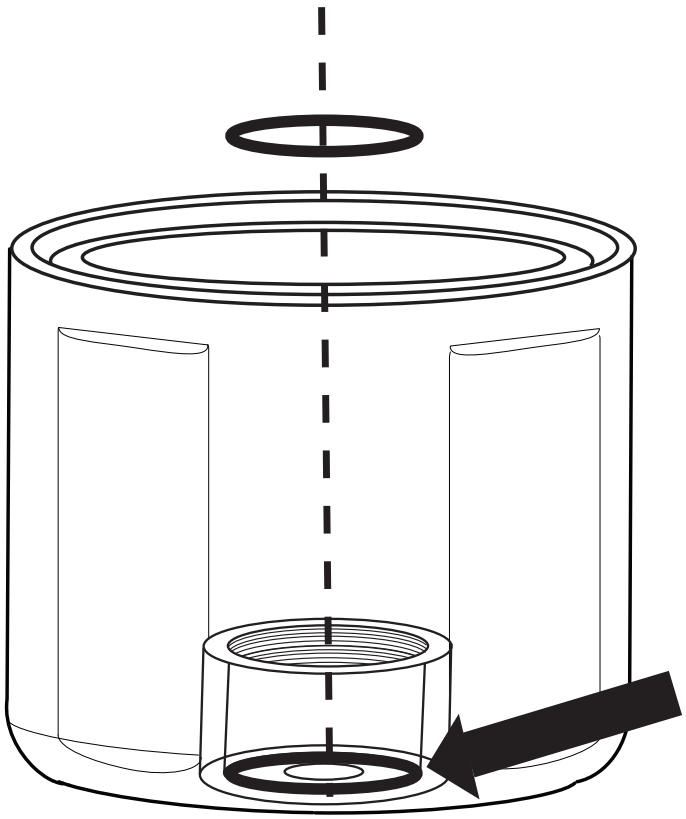

FIGURE 8-4. Proper O-ring placement

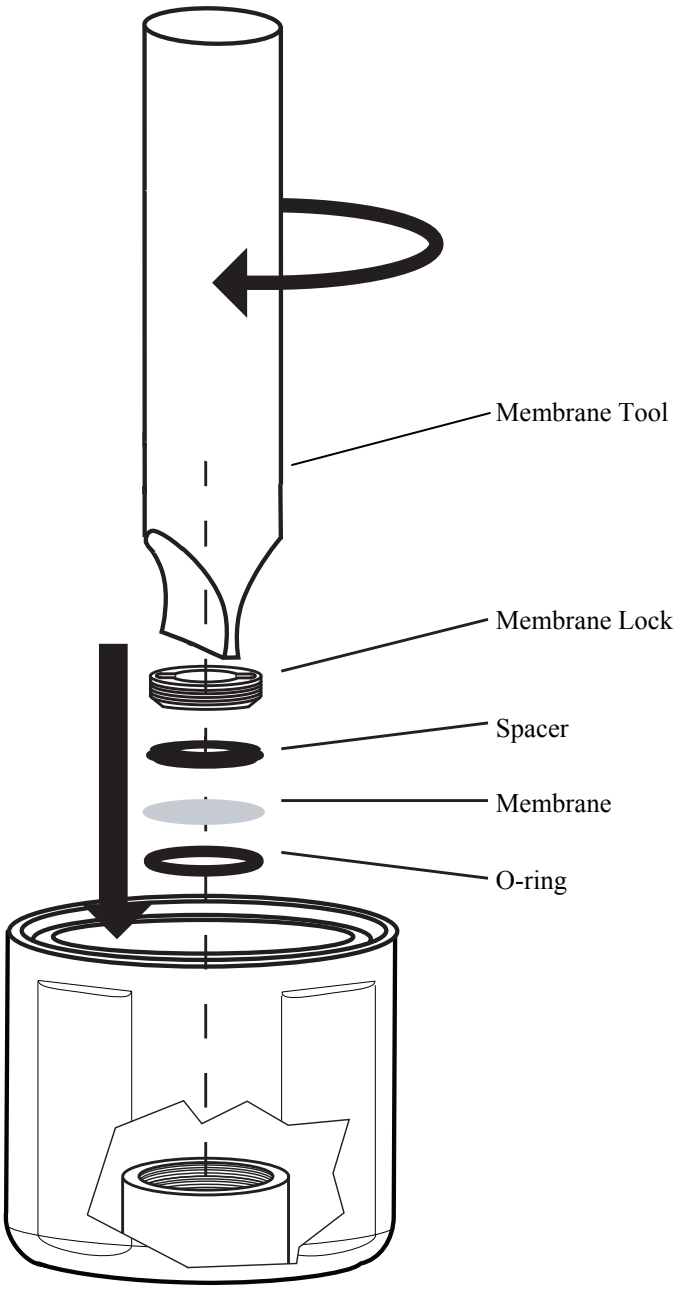

FIGURE 8-5. Installing membrane

7. Inspect the membrane for wrinkles; replace membrane if wrinkled.

8. Pour some clean water into the lower body and look for leakage around the membrane (see FIGURE 8-6); replace membrane if there is leakage. If there is no leakage, dispose of the water.

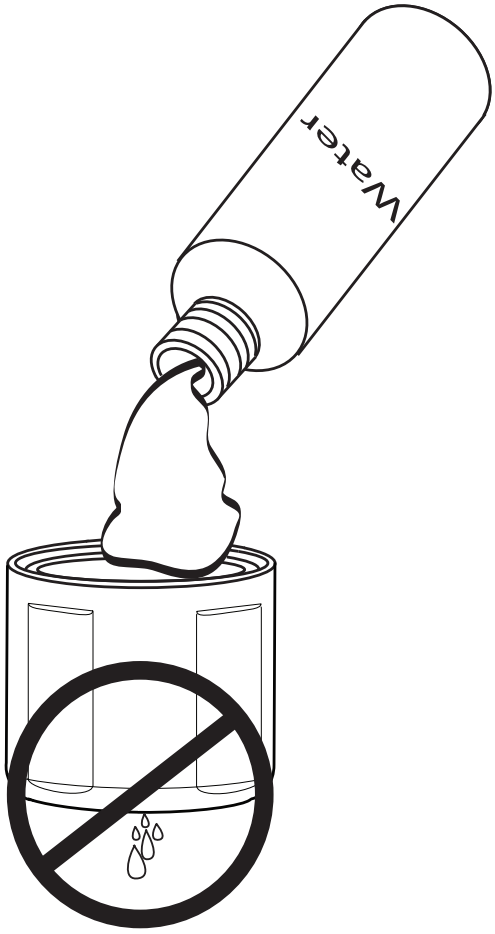

FIGURE 8-6. Check for leakage

9. Pour fresh electrolyte in the bottom cap and fill to the top of the cap.

10. Keep the sensor upright so that the cable is pointed upwards (not sideways). Screw the bottom cap onto the upper body until hand tight.

NOTE Excess electrolyte will leak out at the joint between the sensor's cap and upper body.

Appendix A. Dissolved Oxygen Tables

Table I: Dissolved Oxygen in Fresh Water

Solubility of dissolved oxygen (mg/L) as a function of temperature and pressure for moist air, salinity = 0.0 ppt.

	ALTITUDE (Feet/Metres) and equivalent BAROMETRIC PRESSURE (mm Hg/mbar)												
	0	500	1000	1500	2000	2500	3000	3500	4000	4500	5000	5500	6000	Feet
	0	152	305	457	610	762	914	1067	1219	1372	1524	1676	1829	Metres
TEMP.	760	747	733	721	708	695	683	671	659	648	636	625	614	mm Hg
°C °F	1013	995	978	961	944	927	911	895	879	863	848	833	819	mbar
0 32.0	14.60	14.34	14.09	13.84	13.60	13.36	13.12	12.89	12.67	12.44	12.22	12.01	11.80	
1 33.8	14.20	13.95	13.70	13.46	13.22	12.99	12.76	12.54	12.32	12.10	11.89	11.68	11.47	
2 35.6	13.81	13.57	13.33	13.10	12.87	12.64	12.42	12.20	11.98	11.77	11.56	11.36	11.16	
3 37.4	13.45	13.21	12.98	12.75	12.52	12.30	12.09	11.87	11.66	11.46	11.26	11.06	10.86	
4 39.2	13.09	12.86	12.64	12.41	12.20	11.98	11.77	11.56	11.36	11.16	10.96	10.77	10.58	
5 41.0	12.76	12.53	12.31	12.09	11.88	11.67	11.47	11.26	11.07	10.87	10.68	10.49	10.31	
6 42.8	12.44	12.22	12.00	11.79	11.58	11.38	11.18	10.98	10.79	10.60	10.41	10.23	10.05	
7 44.6	12.13	11.91	11.70	11.50	11.29	11.10	10.90	10.71	10.52	10.33	10.15	9.97	9.80	
8 46.4	11.83	11.62	11.42	11.22	11.02	10.83	10.63	10.45	10.26	10.08	9.91	9.73	9.56	
9 48.2	11.55	11.34	11.15	10.95	10.76	10.57	10.38	10.20	10.02	9.84	9.67	9.50	9.33	
10 50.0	11.28	11.08	10.88	10.69	10.50	10.32	10.14	9.96	9.78	9.61	9.44	9.27	9.11	
11 51.8	11.02	10.82	10.63	10.44	10.26	10.08	9.90	9.73	9.56	9.39	9.22	9.06	8.90	
12 53.6	10.77	10.58	10.39	10.21	10.03	9.85	9.68	9.51	9.34	9.17	9.01	8.85	8.70	
13 55.4	10.53	10.34	10.16	9.98	9.80	9.63	9.46	9.29	9.13	8.97	8.81	8.66	8.50	
14 57.2	10.29	10.11	9.93	9.76	9.59	9.42	9.25	9.09	8.93	8.77	8.62	8.47	8.32	
15 59.0	10.07	9.89	9.72	9.55	9.38	9.22	9.05	8.89	8.74	8.58	8.43	8.28	8.14	
16 60.8	9.86	9.68	9.51	9.35	9.18	9.02	8.86	8.70	8.55	8.40	8.25	8.11	7.96	
17 62.6	9.65	9.48	9.31	9.15	8.99	8.83	8.68	8.52	8.37	8.22	8.08	7.94	7.80	
18 64.4	9.45	9.29	9.12	8.96	8.80	8.65	8.50	8.35	8.20	8.06	7.91	7.77	7.64	
19 66.2	9.26	9.10	8.94	8.78	8.63	8.47	8.32	8.18	8.03	7.89	7.75	7.62	7.48	
20 68.0	9.08	8.92	8.76	8.61	8.45	8.30	8.16	8.01	7.87	7.73	7.60	7.46	7.33	
21 69.8	8.90	8.74	8.59	8.44	8.29	8.14	8.00	7.86	7.72	7.58	7.45	7.32	7.19	
22 71.6	8.73	8.57	8.42	8.27	8.13	7.98	7.84	7.71	7.57	7.44	7.31	7.18	7.05	
23 73.4	8.56	8.41	8.26	8.12	7.97	7.83	7.69	7.56	7.43	7.29	7.17	7.04	6.92	
24 75.2	8.40	8.25	8.11	7.96	7.82	7.69	7.55	7.42	7.29	7.16	7.03	6.91	6.79	
25 77.0	8.24	8.10	7.96	7.82	7.68	7.54	7.41	7.28	7.15	7.03	6.90	6.78	6.66	
26 78.8	8.09	7.95	7.81	7.67	7.54	7.41	7.28	7.15	7.02	6.90	6.78	6.66	6.54	
27 80.6	7.95	7.81	7.67	7.54	7.40	7.27	7.14	7.02	6.90	6.77	6.65	6.54	6.42	
28 82.4	7.81	7.67	7.53	7.40	7.27	7.14	7.02	6.89	6.77	6.65	6.54	6.42	6.31	
29 84.2	7.67	7.54	7.40	7.27	7.14	7.02	6.90	6.77	6.65	6.54	6.42	6.31	6.20	
30 86.0	7.54	7.41	7.28	7.15	7.02	6.90	6.78	6.66	6.54	6.42	6.31	6.20	6.09	
31 87.8	7.41	7.28	7.15	7.03	6.90	6.78	6.66	6.54	6.43	6.32	6.20	6.09	5.99	
32 89.6	7.29	7.16	7.03	6.91	6.79	6.67	6.55	6.43	6.32	6.21	6.10	5.99	5.89	
33 91.4	7.17	7.04	6.92	6.79	6.67	6.56	6.44	6.33	6.22	6.11	6.00	5.89	5.79	
34 93.2	7.05	6.92	6.80	6.68	6.56	6.45	6.34	6.22	6.11	6.01	5.90	5.80	5.69	
35 95.0	6.93	6.81	6.69	6.57	6.46	6.34	6.23	6.12	6.02	5.91	5.81	5.70	5.60	
36 96.8	6.82	6.70	6.59	6.47	6.36	6.24	6.13	6.03	5.92	5.82	5.71	5.61	5.51	
37 98.6	6.72	6.60	6.48	6.37	6.26	6.15	6.04	5.93	5.83	5.72	5.62	5.52	5.43	
38 100.4	6.61	6.49	6.38	6.27	6.16	6.05	5.94	5.84	5.74	5.63	5.53	5.44	5.34	
39 102.2	6.51	6.39	6.28	6.17	6.06	5.96	5.85	5.75	5.65	5.55	5.45	5.35	5.26	
40 104.0	6.41	6.30	6.19	6.08	5.97	5.86	5.76	5.66	5.56	5.46	5.37	5.27	5.18	

Table II: Dissolved Oxygen in Saline Water

Solubility of dissolved oxygen (mg/L) as a function of temperature and salinity for moist air at sea level

TEMP		SALINITY - Parts per Thousand								
°C	°F	0	5	10	15	20	25	30	35	40
0	32.0	14.60	14.11	13.64	13.18	12.74	12.31	11.90	11.50	11.11
1	33.8	14.20	13.73	13.27	12.83	12.40	11.98	11.58	11.20	10.83
2	35.6	13.81	13.36	12.91	12.49	12.07	11.67	11.29	10.91	10.55
3	37.4	13.45	13.00	12.58	12.16	11.76	11.38	11.00	10.64	10.29
4	39.2	13.09	12.67	12.25	11.85	11.47	11.09	10.73	10.38	10.04
5	41.0	12.76	12.34	11.94	11.56	11.18	10.82	10.47	10.13	9.80
6	42.8	12.44	12.04	11.65	11.27	10.91	10.56	10.22	9.89	9.57
7	44.6	12.13	11.74	11.37	11.00	10.65	10.31	9.98	9.66	9.35
8	46.4	11.83	11.46	11.09	10.74	10.40	10.07	9.75	9.44	9.14
9	48.2	11.55	11.19	10.83	10.49	10.16	9.84	9.53	9.23	8.94
10	50.0	11.28	10.92	10.58	10.25	9.93	9.62	9.32	9.03	8.75
11	51.8	11.02	10.67	10.34	10.02	9.71	9.41	9.12	8.83	8.56
12	53.6	10.77	10.43	10.11	9.80	9.50	9.21	8.92	8.65	8.38
13	55.4	10.53	10.20	9.89	9.59	9.30	9.01	8.74	8.47	8.21
14	57.2	10.29	9.98	9.68	9.38	9.10	8.82	8.55	8.30	8.04
15	59.0	10.07	9.77	9.47	9.19	8.91	8.64	8.38	8.13	7.88
16	60.8	9.86	9.56	9.28	9.00	8.73	8.47	8.21	7.97	7.73
17	62.6	9.65	9.36	9.09	8.82	8.55	8.30	8.05	7.81	7.58
18	64.4	9.45	9.17	8.90	8.64	8.39	8.14	7.90	7.66	7.44
19	66.2	9.26	8.99	8.73	8.47	8.22	7.98	7.75	7.52	7.30
20	68.0	9.08	8.81	8.56	8.31	8.07	7.83	7.60	7.38	7.17
21	69.8	8.90	8.64	8.39	8.15	7.91	7.69	7.46	7.25	7.04
22	71.6	8.73	8.48	8.23	8.00	7.77	7.54	7.33	7.12	6.91
23	73.4	8.56	8.32	8.08	7.85	7.63	7.41	7.20	6.99	6.79
24	75.2	8.40	8.16	7.93	7.71	7.49	7.28	7.07	6.87	6.68
25	77.0	8.24	8.01	7.79	7.57	7.36	7.15	6.95	6.75	6.56
26	78.8	8.09	7.87	7.65	7.44	7.23	7.03	6.83	6.64	6.46
27	80.6	7.95	7.73	7.51	7.31	7.10	6.91	6.72	6.53	6.35
28	82.4	7.81	7.59	7.38	7.18	6.98	6.79	6.61	6.42	6.25
29	84.2	7.67	7.46	7.26	7.06	6.87	6.68	6.50	6.32	6.15
30	86.0	7.54	7.33	7.14	6.94	6.75	6.57	6.39	6.22	6.05
31	87.8	7.41	7.21	7.02	6.83	6.65	6.47	6.29	6.12	5.96
32	89.6	7.29	7.09	6.90	6.72	6.54	6.36	6.19	6.03	5.87
33	91.4	7.17	6.98	6.79	6.61	6.44	6.26	6.10	5.94	5.78
34	93.2	7.05	6.86	6.68	6.51	6.33	6.17	6.01	5.85	5.69
35	95.0	6.93	6.75	6.58	6.40	6.24	6.07	5.92	5.76	5.61
36	96.8	6.82	6.65	6.47	6.31	6.14	5.98	5.83	5.68	5.53
37	98.6	6.72	6.54	6.37	6.21	6.05	5.89	5.74	5.59	5.45
38	100.4	6.61	6.44	6.28	6.12	5.96	5.81	5.66	5.51	5.37
39	102.2	6.51	6.34	6.18	6.03	5.87	5.72	5.58	5.44	5.30
40	104.0	6.41	6.25	6.09	5.94	5.79	5.64	5.50	5.36	5.22

Appendix B. Sensorex's Model DO6200/T

Prior to June 2008, Campbell Scientific's CS511 was Sensorex's model DO6200/T (see FIGURE B-1) instead of Sensorex's model DO6400/T. Programming, wiring, and some specifications are the same for these two sensors. However, they look different and use different accessories.

FIGURE B-1. Sensorex's model DO6200/T

B.1 DO6200/T Specifications

Principle of Measurement:	Membrane covered, galvanic oxygen probe
Output Signal:	1.65 mV ± 0.45 mV per mg/l
Accuracy:	Better than ± 2 % of reading ± 1 digit when calibration temperature equals measuring temperature ± 5°C
Output Impedance:	10 kΩ nominal
Response Time:	After equilibration, 2 min. for 90% of final value
Materials of Construction:	
Probe body:	Delrin
O-rings:	Membrane O-ring = Buna N Body Seal O-ring = Viton
Membrane:	0.05 mm Teflon

Dimensions and Weight:	8.9 cm (3.5 in) height, 5.6 cm (2.2 in) diameter, 0.5 kg (1.1 lb)
Cable Length:	3 m (10 ft)
Cable Description:	5-wire, 22 AWG-shielded, PVC jacketed
Operating Conditions:	
Temperature	0° to 50°C (32° to 122°F)
Pressure:	Maximum 10 atmospheres (147 psig)
Minimum Submersion Depth:	60 mm (2.5 in)
Minimum Water Flow:	5 cm/s (2 in/sec) across membrane
Calibration:	In air or in air saturated water
Temperature Compensation:	Automatic from 4° to 40°C (40° to 104°F)
Range of Dissolved Oxygen:	0 to 20 mg/l, 0 to 200 % saturated
Electrode Materials:	Ag cathode/Zn anode
Probe Electrolyte:	NaCl

B.2 Accessories for DO6200/T

14054 Teflon Membrane for DO6200/T (Qty 5)
14053 Teflon Membrane for DO6200/T (Qty 25)
14056 Membrane Replacement Tool for DO6200/T
14055 DO Electrolyte for DO6200/T, 500 ml

Appendix C. PT4-L Agitator

C.1 Description

The PT4 agitator is a reliable, robust agitator for use in conjunction with probes subjected to bio-fouling in ponds and stagnant water conditions (flow <5 cm/s).

O_2 probes require a minimum water velocity across their membranes to function properly. Therefore, to measure DO in stagnant water conditions, it is necessary to move the water past the membrane to get accurate and reliable DO measurements. In many instances, the water also has a high bio-loading and the probes become fouled resulting in inaccurate DO measurements.

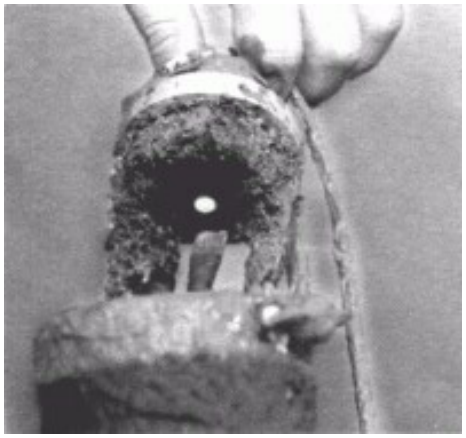

FIGURE C-1. Preventing Bio-fouling of a DO Sensor

The PT4 agitator overcomes these problems. The device is designed so that a soft-bristle brush sweeps across the probe membrane or sensor tip. This sweeping action of the brush provides the required water velocity as well as prevents the membrane from becoming bio-fouled.

The optimum sweeping frequency depends on the design of the probe and type of membrane used and water conditions. An ON-time of 0.25 s and OFF-time of 5 s is suitable in most circumstances.

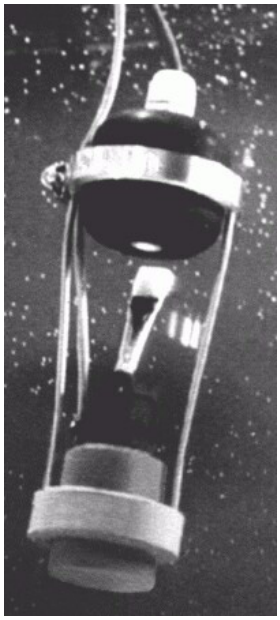

FIGURE C-2. DO sensor with PT4 Agitator

C.2 PT4-L Specifications

Diameter:	8.3 cm (3.25 in)
Length:	18.0 cm (7.125 in)
Weight:	0.6 kg (1.25 lb)
Cable length:	3 m (10 ft)
Power requirements:	10.5 to 18 Vdc at the agitator
Active current consumption:	1.1 A
Maximum ON time:	3 s

C.3 Agitator Control

Campbell Scientific ships the agitator with a repeat cycle timer. Using the repeat-cycle timer requires no datalogger programming. However, some users choose to use a solid-state relay and have the datalogger agitate the water on the probe face either periodically throughout the day or just before measurement. Agitating just before the measurement saves on power and causes less wear and tear on the agitator and probe membrane.

The wiring for the agitator as controlled by this example program is as follows:

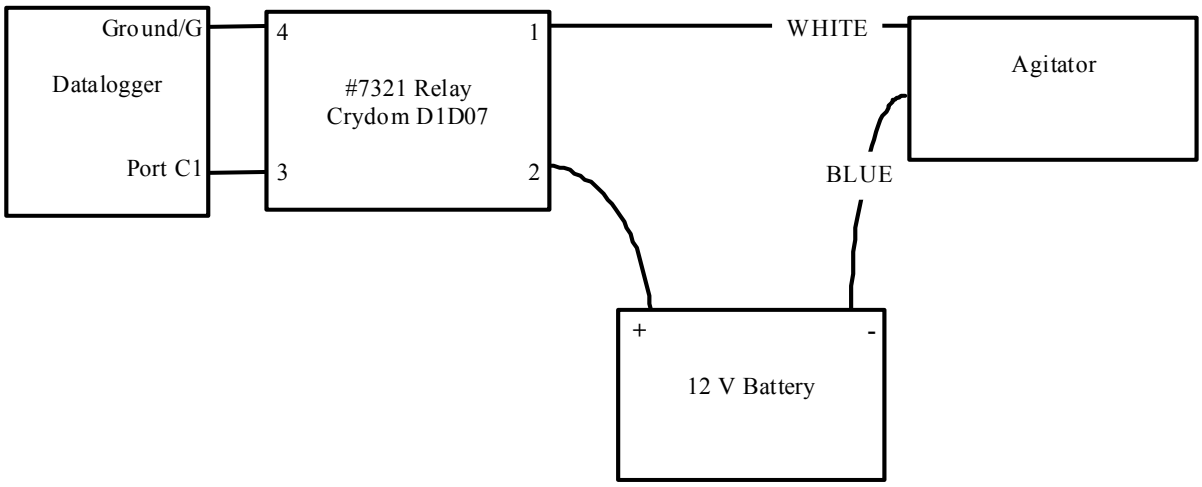

FIGURE C-3. Agitator Wiring

The following instructions would trigger the agitator as discussed in the agitator manual.

The CR800, CR850, CR1000, CR3000, and CR5000 use the **Portset()** instruction as follows:

CR1000 Portset() Instruction Example

```
Portset (1,1)
Delay (1,500,msec)
Portset (1,0)
```

The CR200(X)-series use the **Portset()** instruction as follows:

CR200(X) Portset() Instruction Example

```
Portset (1,1)
Delay(500,msec)
Portset(1,0)
```

The CR510, CR10X, and CR23X use instruction P86 and P22 as follows:

CR10X P86 and P22 Instructions Example

```
45:  Do (P86)
   1:   41            Set Port 1 High

46:  Excitation with Delay (P22)
   1:   1             Ex Channel
   2:   20            Delay W/Ex (units = 0.01 sec)
   3:   0             Delay After Ex (units = 0.01 sec)
   4:   0             mV Excitation

47:  Do (P86)
   1:   51            Set Port 1 Low

48:  End (P95)
```

The above examples are not as power efficient as possible and would require AC power to maintain a sufficient battery charge. If it is necessary to operate an agitator without AC power available, write the program so that the agitator is only operated for a short period of time just before the measurement is to be taken.

Campbell Scientific Companies

Campbell Scientific, Inc. (CSI)
815 West 1800 North
Logan, Utah 84321
UNITED STATES
www.campbellsci.com • info@campbellsci.com

Campbell Scientific Africa Pty. Ltd. (CSAf)
PO Box 2450
Somerset West 7129
SOUTH AFRICA
www.csafrica.co.za • cleroux@csafrica.co.za

Campbell Scientific Australia Pty. Ltd. (CSA)
PO Box 8108
Garbutt Post Shop QLD 4814
AUSTRALIA
www.campbellsci.com.au • info@campbellsci.com.au

Campbell Scientific do Brazil Ltda. (CSB)
Rua Luisa Crapsi Orsi, 15 Butantã
CEP: 005543-000 São Paulo SP BRAZIL
www.campbellsci.com.br • suporte@campbellsci.com.br

Campbell Scientific Canada Corp. (CSC)
11564 - 149th Street NW
Edmonton, Alberta T5M 1W7
CANADA
www.campbellsci.ca • dataloggers@campbellsci.ca

Campbell Scientific Centro Caribe S.A. (CSCC)
300 N Cementerio, Edificio Breller
Santo Domingo, Heredia 40305
COSTA RICA
www.campbellsci.cc • info@campbellsci.cc

Campbell Scientific Ltd. (CSL)
Campbell Park
80 Hathern Road
Shepshed, Loughborough LE12 9GX
UNITED KINGDOM
www.campbellsci.co.uk • sales@campbellsci.co.uk

Campbell Scientific Ltd. (France)
3 Avenue de la Division Leclerc
92160 ANTONY
FRANCE
www.campbellsci.fr • info@campbellsci.fr

Campbell Scientific Spain, S. L.
Avda. Pompeu Fabra 7-9, local 1
08024 Barcelona
SPAIN
www.campbellsci.es • info@campbellsci.es

Please visit www.campbellsci.com to obtain contact information for your local US or international representative.