INSTRUCTION MANUAL

WindSonic Two-Dimensional Sonic Anemometer

Revision: 8/13

Warranty

"PRODUCTS MANUFACTURED BY CAMPBELL SCIENTIFIC, INC. are warranted by Campbell Scientific, Inc. ("Campbell") to be free from defects in materials and workmanship under normal use and service for twelve (12) months from date of shipment unless otherwise specified in the corresponding Campbell pricelist or product manual. Products not manufactured, but that are re-sold by Campbell, are warranted only to the limits extended by the original manufacturer. Batteries, fine-wire thermocouples, desiccant, and other consumables have no warranty. Campbell's obligation under this warranty is limited to repairing or replacing (at Campbell's option) defective products, which shall be the sole and exclusive remedy under this warranty. The customer shall assume all costs of removing, reinstalling, and shipping defective products to Campbell. Campbell will return such products by surface carrier prepaid within the continental United States of America. To all other locations, Campbell will return such products best way CIP (Port of Entry) INCOTERM® 2010, prepaid. This warranty shall not apply to any products which have been subjected to modification, misuse, neglect, improper service, accidents of nature, or shipping damage. This warranty is in lieu of all other warranties, expressed or implied. The warranty for installation services performed by Campbell such as programming to customer specifications, electrical connections to products manufactured by Campbell, and product specific training, is part of Campbell's product warranty. CAMPBELL EXPRESSLY DISCLAIMS AND EXCLUDES ANY IMPLIED WARRANTIES OF MERCHANTABILITY OR FITNESS FOR A PARTICULAR PURPOSE. Campbell is not liable for any special, indirect, incidental, and/or consequential damages."

Assistance

Products may not be returned without prior authorization. The following contact information is for US and international customers residing in countries served by Campbell Scientific, Inc. directly. Affiliate companies handle repairs for customers within their territories. Please visit *www.campbellsci.com* to determine which Campbell Scientific company serves your country.

To obtain a Returned Materials Authorization (RMA), contact CAMPBELL SCIENTIFIC, INC., phone (435) 227-9000. After an applications engineer determines the nature of the problem, an RMA number will be issued. Please write this number clearly on the outside of the shipping container. Campbell Scientific's shipping address is:

CAMPBELL SCIENTIFIC, INC.
RMA#_____
815 West 1800 North
Logan, Utah 84321-1784

For all returns, the customer must fill out a "Statement of Product Cleanliness and Decontamination" form and comply with the requirements specified in it. The form is available from our web site at *www.campbellsci.com/repair*. A completed form must be either emailed to *repair@campbellsci.com* or faxed to (435) 227-9106. Campbell Scientific is unable to process any returns until we receive this form. If the form is not received within three days of product receipt or is incomplete, the product will be returned to the customer at the customer's expense. Campbell Scientific reserves the right to refuse service on products that were exposed to contaminants that may cause health or safety concerns for our employees.

Table of Contents

PDF viewers: These page numbers refer to the printed version of this document. Use the PDF reader bookmarks tab for links to specific sections.

Appendices

Figures

Tables

WindSonic Two-Dimensional Sonic Anemometer

1. Introduction

The WindSonic1 and WindSonic4 are two-dimensional ultrasonic anemometers for measuring wind speed and wind direction. They provide an alternative to traditional mechanical cup and vane or propeller and vane anemometers. Unlike mechanical anemometers, there are no moving parts to be periodically replaced—minimizing routine maintenance costs. These two-dimensional anemometers are manufactured by Gill Instruments, Ltd.

The WindSonic1 and WindSonic4 differ in their output signal. The WindSonic1 outputs an RS-232 signal that can be read by the CR800, CR850, CR1000, or CR3000 dataloggers. The WindSonic4 outputs an SDI-12 signal that can be read by the CR200(X)-series, CR510, CR10X, CR800, CR850, CR1000, CR3000, or CR5000 dataloggers.

Before installing the WindSonic, please study

- Section 2, *Cautionary Statements*
- Section 3, *Initial Inspection*
- Section 4, *Quickstart*

2. Cautionary Statements

- The WindSonic is a precision instrument. Please handle it with care.

- If the WindSonic is to be installed at heights over 2 m (6 ft), be familiar with tower safety and follow safe tower climbing procedures.

- DANGER—Use extreme care when working near overhead electrical wires. Check for overhead wires before mounting the WindSonic or before raising a tower.

- WindSonic1's default settings were changed in February 2013. WindSonic1s with newer settings will not work with older programs and Short Cut 3.0 or older. See Section 6.4, *Campbell Scientific Factory Default Settings for the WindSonic1*, and Appendix B for more information.

- Communications between the WindSonic1 and the datalogger will most likely fail if its cable is extended beyond 50 feet.

- For the WindSonic4, the maximum cable length tested by Gill is 91 m (300 ft). The SDI-12 standard specifies that an SDI-12 sensor must be able to use at least 61 m (200 ft) of signal cable. Greater SDI-12 cable lengths are acceptable.

- The black outer jacket of the cable is Santoprene® rubber. This compound was chosen for its resistance to temperature extremes, moisture, and UV degradation. However, this jacket will support combustion in air. It is rated as slow burning when tested according to U.L. 94 H.B. and will pass FMVSS302. Local fire codes may preclude its use inside buildings.

3. Initial Inspection

- Upon receipt of the WindSonic, inspect the packaging and contents for damage. File damage claims with the shipping company. Immediately check package contents against the shipping documentation (see Section 3.1, *Ships With*). Contact Campbell Scientific about any discrepancies.

- The model number and cable length are printed on a label at the connection end of the cable. Check this information against the shipping documents to ensure the expected product and cable length are received.

3.1 Ships With

The WindSonic is shipped with the ResourceDVD and a mounting kit (pn 17387). The mounting kit includes a 34.93 cm (13.75 inch) length of tubing (pn 17386), three #6-32 x 0.375 inch pan head screws (pn 505), and a Right Angle Mounting Kit (pn CM220).

4. Quickstart

4.1 Siting

Locate the WindSonic away from obstructions such as trees and buildings. The distance between wind sensors and the nearest obstruction should be ten times the height of the obstruction. If it is necessary to mount the WindSonic on the roof of a building, the height of the sensor, above the roofline, should be at least 1.5 times the height of the building. See Section 10, *Siting References*, for a list of references that discuss siting wind direction and speed sensors.

4.2 Mount the Sensor

The WindSonic is mounted using the components of the 17387 Mounting Pipe Kit, which is shipped with the WindSonic (see Section 3.1, *Ships With*).

1. Thread the connector end of the cable through the tubing; start at the end without the three threaded holes.

2. Attach the female mating connector on the cable to the male mating connector located on the bottom of the WindSonic.

3. Secure the WindSonic to the tubing using the three #6-32 x 0.375-inch pan head screws (pn 505).

4. Attach the tubing to a CM202, CM204, or CM206 crossarm via the CM220 Right Angle Mounting Kit (see FIGURE 4-1).

5. Mount the crossarm to the tripod or tower.

6. Orient the WindSonic so that the colored North marker arrows point to True North (see FIGURE 4-1). Appendix A contains detailed information on determining True North using a compass and the magnetic declination for the site.

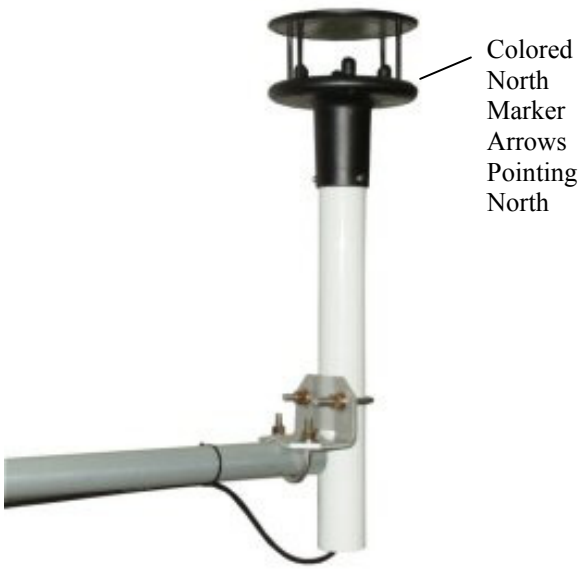

FIGURE 4-1. WindSonic mounted on a CM202 using pn 17837

7. Route the sensor cable along the underside of the crossarm to the tripod or tower, and to the instrument enclosure.

8. Secure the cable to the crossarm and tripod or tower using cable ties.

4.3 Use Short Cut Program Generator for Windows (SCWin) to Program Datalogger and Generate Wiring Diagram

The simplest method for programming the datalogger to measure the WindSonic is to use Campbell Scientific's SCWin. This section provides information about using Short Cut with the WindSonic4. See Section 7, *Operation*, for WindSonic1 programming information and additional WindSonic4 programming information.

1. Open Short Cut and click on **New Program**.

2. Select the datalogger and enter the scan interval.

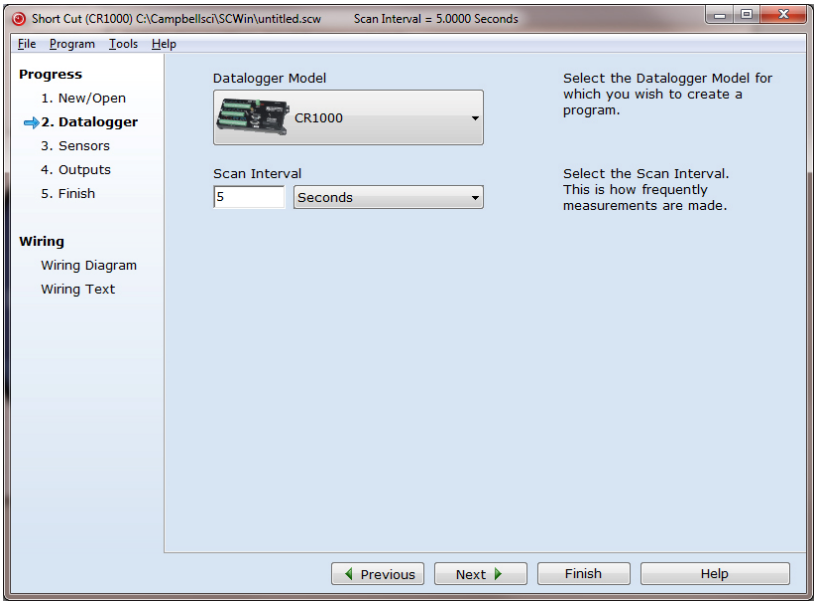

3. Select **WindSonic4 (SDI-12) Two Dimensional Ultrasonic Wind Sensor** and select the right arrow (in center of screen) to add it to the list of sensors to be measured then select next.

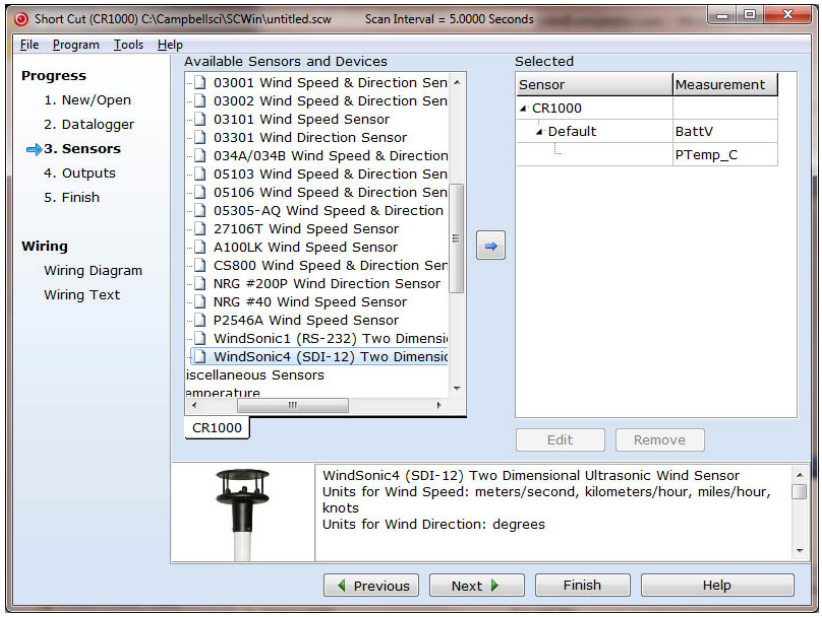

4. Define the name of the public variables and SDI-12 Address. Variables default to **WindDir**, **WS_ms**, and **WSDiag** that hold the wind direction measurements, wind speed measurements, and diagnostic code. The **SDI-12 Address** defaults to 0. Select the desired units of measurement for the wind speed. Units default to **meters/seconds**.

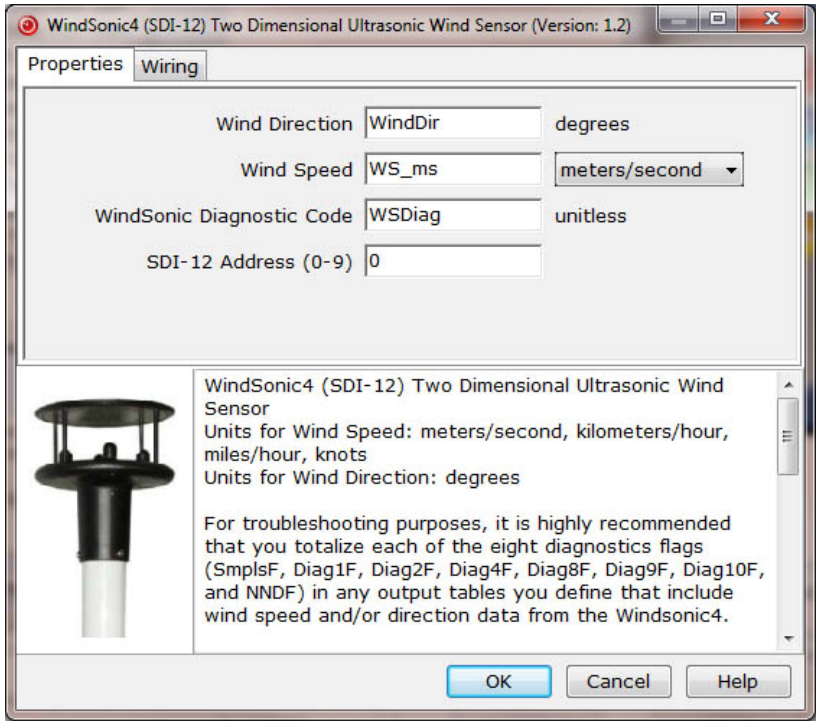

5. Select the outputs and then select finish.

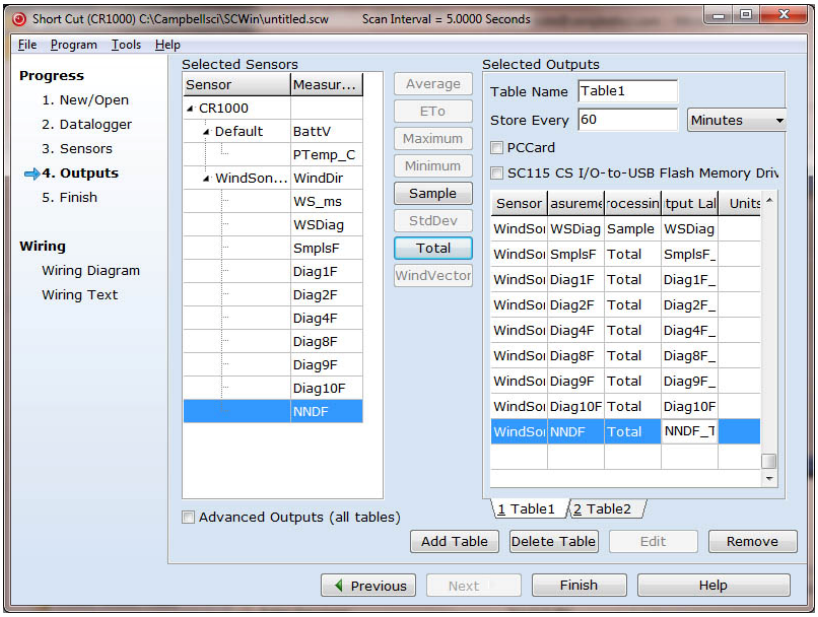

6. Wire according to the wiring diagram generated by SCWin Short Cut.

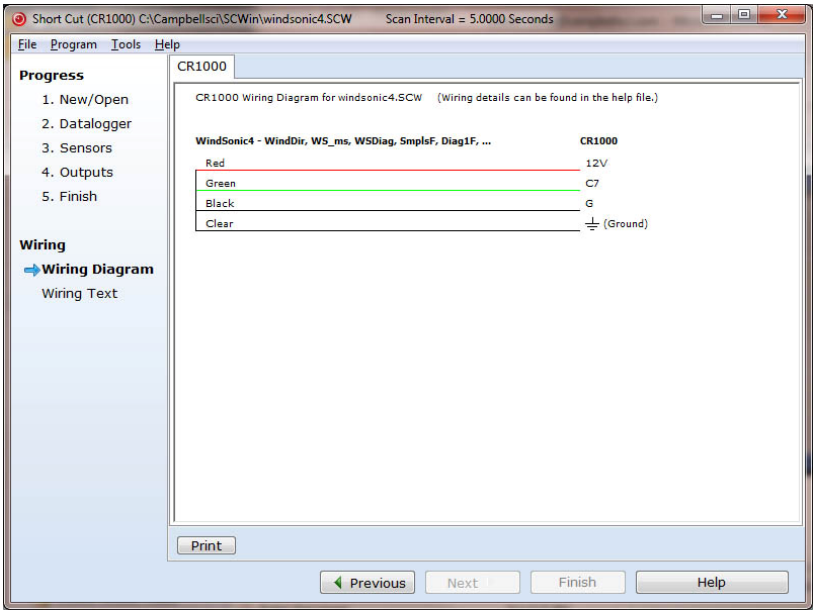

5. Overview

The WindSonic is an ultrasonic anemometer for measuring wind direction and wind speed. It uses two pairs of orthogonally oriented transducers to sense horizontal wind. The transducers bounce the ultrasonic signal from a hood, minimizing the effects of transducer shadowing and flow distortion.

Detailed information on the Gill WindSonic is available in the manual published by Gill Instruments, Ltd. and can be found at *www.gill.co.uk/products/anemometer/windsonic.htm*. This manual serves as a guide for interfacing the WindSonic to Campbell Scientific dataloggers. The WindSonic is available in two versions. Option 1 WindSonic (WindSonic1) outputs data using the RS-232 interface. Option 4 WindSonic (WindSonic4) outputs data using the SDI-12 interface.

The WindSonic1 connects to the control/serial ports (COMn) of a CR800-series, CR1000, or CR3000 datalogger. Two control ports make a COMn serial port; for example, Port 1 and 2 are COM1. A maximum of four WindSonic1 anemometers can be connected to a single CR1000 or CR3000 datalogger, while two can be connected to the CR800-series control ports (COMn). Additional WindSonic1 anemometers can be interfaced using the SDM-SIO1. Campbell Scientific does not recommend using the CR200(X)-series, CR5000, or any of the Edlog dataloggers with the WindSonic1 because of their limited serial support using the control ports.

Campbell Scientific recommends that the WindSonic4, SDI-12 interface, be used with CR200(X)-series, CR510, CR10X, CR23X, or CR5000 dataloggers. SDI-12 is a three-wire digital interface standard used by processor-based sensors and digital recording devices. The CR800-series, CR1000, and CR3000 dataloggers also support the SDI-12 interface.

The WindSonic includes a user-specified cable to interface to a Campbell Scientific datalogger. The WindSonic's cable can terminate in:

- Pigtails that connect directly to a Campbell Scientific datalogger (option ─PT).
- Connector that attaches to a prewired enclosure (option ─PW). Refer to *www.campbellsci.com/prewired-enclosures* for more information.

A serial cable (WINDSONICRCBL-L) is available for interfacing a WindSonic1 or WindSonic4 to a PC running Gill's PC support software. The cable and software are used during troubleshooting or to change settings in the WindSonic1 for a specific application. A copy of Gill's PC support software is available at *www.gill.co.uk/main/software.html*. WindView is used for WindSonics with serial numbers of 0810001 or greater, and WindCom is used for WindSonics with serial numbers that are less than 0810001.

6. Specifications

Features:

- Low maintenance—no moving parts significantly reduces maintenance cost and time
- Minimum detectable wind speed of 0.01 meters per second

Compatible Dataloggers: CR200(X) series (WindSonic4 only)
CR800 series
CR1000
CR3000
CR5000 (WindSonic4 only)
CR510 (WindSonic4 only)
CR10X (WindSonic4 only)
CR23X (WindSonic4 only)

6.1 Wind Direction

Operating Range: 0 to 359° (no dead band)

Accuracy: ±3°

Output Resolution: 1°

6.2 Wind Speed

Operating Range: 0 to 60 m s^{-1}

Accuracy: ±2% @ 12 m s^{-1}

Output Resolution: 0.01 m s^{-1}

6.3 General Specifications

Output Signal: RS-232 (WindSonic1)
SDI-12 version 1.3 (WindSonic4); address factory set to 0

Output Variables: wind direction, wind speed, and diagnostic or u_x, u_y, and diagnostic (WindSonic4 only)

Measurement Frequency: 40 Hz block averaged to a programmable output frequency, factory set to 1 Hz

Current Drain: ~15 mA continuous (WindSonic1)
<12 mA @ 12 V (WindSonic4)

Operating Temperature: –35º to +70ºC

Storage Temperature: –40° to +80°C

Dimensions: 142 x 160 mm (5.6 x 6.3 in)

Weight: 500 g (1.1 lb)

Operating Humidity: <5% to 100% RH

6.4 Campbell Scientific Factory Default Settings for the WindSonic1

The default settings for the WindSonic1 were changed in February 2013 to improve operation in cold temperatures. Sensors with the newer settings have a white dot next to the connector on the underside of the sensor (see FIGURE 6-1). They also include both a yellow and a white heat shrink label on the cable; older sensors included two white heat shrink labels.

- Continuous polar wind (M2)
- Wind speed in m s^{-1} (U1)
- Field formatted, comma separated values (O1) [changed in February 2013]
- Terminate records with a carriage return and line feed (L1)
- 1 Hz output frequency (P1)
- Baud rate – 9600 baud (B3) [changed in February 2013]
- Power up message (H1) [changed in February 2013]
- Address set to “Q” (NQ)
- Data bits and parity — 8 bits, no parity (F1)
- RS-232 interface (E3)
- Analog output 0 to 5 Vdc (T1) — does not apply
- Analogy range 0 to 30 m s^{-1} (S4) — does not apply
- Analog wrap around 0 to 360 degrees (C2) — does not apply
- Minimum direction velocity (K50)

CAUTION WindSonic1s with the newer default settings will not work with older programs or Short Cut 3.0 or older. Appendix B provides information about updating an older program for a WindSonic1 with the newer settings.

FIGURE 6-1. White dot indicating that the WindSonic1 has the newer settings

7. Operation

7.1 Sensor Configuration

In order to best mimic a mechanical anemometer, the WindSonic's output frequency must match the datalogger's scan frequency. The factory setting for the WindSonic1 and WindSonic4 is 1 Hz; for example, 1 output per second. The data output frequency of the WindSonic4 cannot be changed.

The data output frequency of the WindSonic1 can be set to five discrete values (see TABLE 7-1) using Gill's PC support software and the RS-232 WindSonic to PC cable.

TABLE 7-1. WindSonic1 Output Frequencies

Output Frequency (Hz)	Seconds Per Output (s)
4	0.25
2	0.5
1	1
0.5	2
0.25	4

7.2 Wiring

7.2.1 Serial Wiring (COMn)

CRBasic dataloggers (CR800 series, CR1000, and CR3000) support serial communications with dedicated UART hardware on the datalogger control ports. Two control ports can be configured as a single communications (COMn) port. The WindSonic1 serial interface uses four wires as shown in TABLE 7-2.

TABLE 7-2. WindSonic1 to Datalogger Connections

Description	Color	CRBasic Datalogger
WindSonic RxD	Green	COM*n* Tx
WindSonic TxD	White	COM*n* Rx
Power	Red	12 Vdc
Serial/power reference	Black	G
Shield	Clear	G

NOTE The maximum cable length that can be used with a RS-232 interface depends on the baud rate, the nominal resistance of the wire, the capacitance between conductors, and the capacitance between the conductors and the shield. According to the Electronic Industries Association RS-232D standard, a rough rule of thumb is to limit RS-232 cable lengths to 15.24 m (50 feet) or less at 9600 baud.

7.2.2 Serial Wiring (SDM-SIO1)

CRBasic dataloggers support serial communications using the SDM-SIO1 peripheral. The SDM-SIO1 converts RS-232 signals into Synchronous Device for Measurements (SDM). SDM is a Campbell Scientific digital communications protocol used between Campbell Scientific dataloggers and SDM peripherals. At a 1 Hz measurement rate, a maximum of 4 WindSonic1s can be measured by a datalogger. TABLE 7-3 describes the connections between a WindSonic1 and SDM-SIO1.

TABLE 7-3. WindSonic1 to SDM-SIO1 Connections

Description	Color	SDM-SIO1
WindSonic RxD	Green	TX-Z
WindSonic TxD	White	RX-A
Power	Red	+12V
Serial/power reference	Black	G
Shield	Clear	G

7.2.3 SDI-12 Wiring

The WindSonic4 interfaces to a Campbell Scientific datalogger using SDI-12. SDI-12 is a three-wire interface used between processor-based sensors and digital recorders (TABLE 7-4). Each SDI-12 sensor has a unique address. The factory-set address for the WindSonic is 0. To change the SDI-12 address, see Section 7.5, *Changing the SDI-12 Address Using LoggerNet and a Datalogger*, for wiring and programming. At a 1 Hz measurement rate, a maximum of 4 WindSonic4s can be measured by a datalogger.

TABLE 7-4. WindSonic4 to Datalogger Connections

Description	Color	Datalogger
SDI-12 data	Green	SDI-12 Input or Control Port
SDI-12 power	Red	12 Vdc
SDI-12 reference	Black	G
Shield	Clear	G

7.3 Datalogger Programming for RS-232 Output

The WindSonic1 updates the RS-232 output to a user-set frequency. The CRBasic dataloggers (CR800-series, CR1000, and CR3000) use the **SerialInRecord()** instruction to retrieve the latest record sent by the WindSonic1 at the scan interval. This ensures that the most current wind data is available for use by the program.

The datalogger and WindSonic1 each use their own internal clocks. These clocks are not perfectly synchronized with each other and will drift in and out of phase. This phase drift could cause missed samples because no new data was transmitted to the datalogger in time for the next scan. The programs in this manual record the number of missed records as no new data (nnd_TOT). A no new data error will occur if the WindSonic is disconnected from the serial port, the WindSonic has no power, or the datalogger and WindSonic clocks have drifted out of phase by one cycle.

Early versions of the datalogger operating system (OS) did not support serial communication using control ports or the instruction **SerialInRecord()**. It may be necessary to update the datalogger OS. TABLE 7-5 lists the OS versions that support both serial communications using control ports and the **SerialInRecord()**. The most current datalogger operating systems are available on the Campbell Scientific website in the Support|Downloads section.

TABLE 7-5. CRBasic Datalogger Operating Systems that Support RS-232 Communications and SerialInRecord()	
Datalogger Model	**Operating System**
CR800-series	4.0 or later
CR1000	13.0 or later
CR3000	6.0 or later

7.3.1 Example CR1000 Datalogger Program for Measuring a WindSonic1 using COMn Port

TABLE 7-6. Wiring for CR1000 Example Program		
Description	**Color**	**CR1000**
WindSonic RxD	Green	COM1 Tx (C1)
WindSonic TxD	White	COM1 Rx (C2)
Power	Red	+12 Vdc
RS-232/Power reference	Black	G
Shield	Clear	G

```
'CR1000 Series Datalogger
Dim in_bytes_str As String * 21
Dim windsonic(4) As String
Public nmbr_bytes_rtrnd
Public wind_direction
Public wind_speed
Public diag
Units wind_direction = degrees
Units wind_speed = m/s
Units diag = unitless
Dim checksum_flg As Boolean
Dim disable_flg As Boolean
Dim n
Units n = arb
DataTable (stats,TRUE,-1)
  DataInterval (0,30,Min,10)
  WindVector (1,wind_speed,wind_direction,IEEE4,disable_flg,0,0,0)
  FieldNames ("mean_wind_speed,mean_wind_direction,std_wind_dir")
  Totalize (1,n,IEEE4,disable_flg)
  FieldNames ("samples_TOT")
  Totalize (1,n,IEEE4,diag<>1)
  FieldNames ("diag_1_TOT")
  Totalize (1,n,IEEE4,diag<>2)
  FieldNames ("diag_2_TOT")
  Totalize (1,n,IEEE4,diag<>4)
  FieldNames ("diag_4_TOT")
  Totalize (1,n,IEEE4,diag<>8)
  FieldNames ("diag_8_TOT")
  Totalize (1,n,IEEE4,diag<>9)
  FieldNames ("diag_9_TOT")
  Totalize (1,n,IEEE4,diag<>10)
```

```
  FieldNames ("diag_10_TOT")
  Totalize (1,n,IEEE4,nmbr_bytes_rtrnd<>0)
  FieldNames ("nnd_TOT")
  Totalize (1,n,IEEE4,nmbr_bytes_rtrnd<>0 IMP checksum_flg)
  FieldNames ("checksum_err_TOT")
EndTable
BeginProg
  n = 1
  SerialOpen (Com1,9600,3,0,108)
  Scan (1,Sec,3,0)
    'Get data from WindSonic.
    SerialInRecord (Com1,in_bytes_str,&h02,0,&h0D0A,nmbr_bytes_rtrnd,01)
    SplitStr (windsonic(),in_bytes_str,",",4,4) 'Split the string and convert to floats.
    wind_direction = windsonic(1)
    wind_speed = windsonic(2)
    diag = windsonic(4)
    checksum_flg = ( (HexToDec (Right (in_bytes_str,2))) EQV (CheckSum (in_bytes_str,9,Len (in_bytes_str)-3)) )
    disable_flg = ( NOT (checksum_flg) OR (nmbr_bytes_rtrnd=0) OR (diag<>0) )
    CallTable stats
  NextScan
EndProg
```

7.3.2 Example CR1000 Datalogger Program for Measuring a WindSonic1 using an SDM-SIO1

TABLE 7-7. Wiring for CR1000/SDM-SIO1 Program Example

Description	Color	CR1000
WindSonic RxD	Green	TX-Z
WindSonic TxD	White	RX-A
Power	Red	+12 Vdc
RS-232/Power reference	Black	G
Shield	Clear	G

```
'CR1000 Series Datalogger
Dim in_bytes_str As String * 21
Dim windsonic(4) As String
Public nmbr_bytes_rtrnd
Public wind_direction
Public wind_speed
Public diag
Units wind_direction = degrees
Units wind_speed = m/s
Units diag = unitless
Dim checksum_flg As Boolean
Dim disable_flg As Boolean
Dim n
Units n = arb
DataTable (stats,TRUE,-1)
  DataInterval (0,30,Min,10)
  WindVector (1,wind_speed,wind_direction,IEEE4,disable_flg,0,0,0)
  FieldNames ("mean_wind_speed,mean_wind_direction,std_wind_dir")
  Totalize (1,n,IEEE4,disable_flg)
  FieldNames ("samples_TOT")
  Totalize (1,n,IEEE4,diag<>1)
  FieldNames ("diag_1_TOT")
```

```
  Totalize (1,n,IEEE4,diag<>2)
  FieldNames ("diag_2_TOT")
  Totalize (1,n,IEEE4,diag<>4)
  FieldNames ("diag_4_TOT")
  Totalize (1,n,IEEE4,diag<>8)
  FieldNames ("diag_8_TOT")
  Totalize (1,n,IEEE4,diag<>9)
  FieldNames ("diag_9_TOT")
  Totalize (1,n,IEEE4,diag<>10)
  FieldNames ("diag_10_TOT")
  Totalize (1,n,IEEE4,nmbr_bytes_rtrnd<>0)
  FieldNames ("nnd_TOT")
  Totalize (1,n,IEEE4,nmbr_bytes_rtrnd<>0 IMP checksum_flg)
  FieldNames ("checksum_err_TOT")
EndTable
BeginProg
  n = 1
  SerialOpen (40,9600,3,0,108) 'SDM-SIO1 SDM address set To 8.
  Scan (1,Sec,3,0)
    'Get data from WindSonic.
    SerialInRecord (40,in_bytes_str,&h02,0,&h0D0A,nmbr_bytes_rtrnd,01)
    SplitStr (windsonic(),in_bytes_str,",",4,4) 'Split the string and convert to floats.
    wind_direction = windsonic(1)
    wind_speed = windsonic(2)
    diag = windsonic(4)
    checksum_flg = ( (HexToDec (Right (in_bytes_str,2))) EQV (CheckSum (in_bytes_str,9,Len (in_bytes_str)-3)) )
    disable_flg = ( NOT (checksum_flg) OR (nmbr_bytes_rtrnd=0) OR (diag<>0) )
    CallTable stats
  NextScan
EndProg
```

7.4 Datalogger Programming for SDI-12 Output

A program for the WindSonic4 can be written using SCWin. Section 4.3, *Use Short Cut Program Generator for Windows (SCWin) to Program Datalogger and Generate Wiring Diagram*, describes using SCWin to create a datalogger program and wiring diagram for the WindSonic4.

The WindSonic4 updates the SDI-12 output at a frequency of 1 Hz. The most appropriate SDI-12 command to retrieve data from the WindSonic is the ***a*R*o*!**, where *a* is the WindSonic SDI-12 address and *o* is the data format option (TABLE 7-8). For dataloggers that do not support the ***a*R*o*!** command, use the ***a*D*o*!**.

TABLE 7-8. WindSonic Data Format Option

Option (o)	Output	Units	Comment
0	wind direction	degrees	Compass polar coordinate system
	wind speed	m s^{-1}	
	diagnostic	unitless	
1	u_x wind	m s^{-1}	Orthogonal right hand coordinate system
	u_y wind	m s^{-1}	
	diagnostic	unitless	

CAUTION The WindSonic4 returns three data points; the datalogger program must allocate three consecutive input locations (Edlog datalogger) or a variable array with three elements (CRBasic dataloggers).

When the datalogger issues the ***a*R*o*!** command, the WindSonic immediately begins transmitting the most current wind measurements to the datalogger. After receiving the ***a*R*o*!** command, it takes the WindSonic approximately 190 milliseconds ±10 milliseconds to transmit the data. If the ***a*D*o*!** command is used, it will take slightly longer to retrieve the data because of the additional handshaking required with the ***a*D*o*!** command. For all practical purposes, a datalogger can measure up to 4 WindSonic4s at 1 Hz.

TABLE 7-9 lists the datalogger OS version and revision that supports the SDI-12 ***a*R*o*!** command. The most current datalogger operating systems are available at the Campbell Scientific website in the Support|Downloads section.

TABLE 7-9. Datalogger Operating Systems that Support the SDI-12 "*a*R*o*!" Command

Datalogger Model	Operating System
CR510	1.13 or later
CR510-PB	1.6 or later
CR510-TD	1.13 or later
CR10X	1.20 or later
CR10X-PB	1.6 or later
CR10X-TD	1.12 or later
CR23X	1.17 or later
CR23X-PB	1.6 or later
CR23X-TD	1.12 or later
CR200(X)-series	3.0a or later
CR800-series	1.0 or later
CR1000	1.0 or later
CR3000	1.0 or later
CR5000	1.8 or later

7.4.1 Example CR10X (Edlog) Datalogger Program for Measuring a WindSonic4

TABLE 7-10. Wiring for CR10(X) Program Example

Description	Color	CR10X
SDI-12 data	Green	C8
SDI-12 power	Red	+12 Vdc
SDI-12 reference	Black	G
Shield	Clear	G

```
;{CR10X}
;

*Table 1 Program
  01:  1.0000        Execution Interval (seconds)

1:  SDI-12 Recorder (P105)
  1:   0             SDI-12 Address
  2:   20            Continuous Measurements (aR0!)
  3:   8             Port
  4:   1             Loc [ wnd_dir   ]
  5:   1             Mult
  6:   0             Offset

2:  Z=F x 10^n (P30)
  1:   1             F
  2:   0             n, Exponent of 10
  3:   4             Z Loc [ samples   ]

3:  If (X<=>F) (P89)
  1:   1             X Loc [ wnd_dir   ]
  2:   4             <
  3:   -99990        F
  4:   30            Then Do

4:  Block Move (P54)
  1:   2             No. of Values
  2:   1             First Source Loc [ wnd_dir   ]
  3:   1             Source Step
  4:   2             First Destination Loc [ wnd_spd   ]
  5:   1             Destination Step

5:  End (P95)

6:  If time is (P92)
  1:   0             Minutes (Seconds --) into a
  2:   30            Interval (same units as above)
  3:   10            Set Output Flag High (Flag 0)

7:  Real Time (P77)
  1:   110           Day,Hour/Minute (midnight = 0000)
```

```
8:  If (X<=>F) (P89)
   1:   3              X Loc [ ws_diag   ]
   2:   2              <>
   3:   0              F
   4:   19             Set Intermed. Proc. Disable Flag High (Flag 9)

9:  Wind Vector (P69)
   1:   1              Reps
   2:   0              Samples per Sub-Interval
   3:   0              S, theta(1), sigma(theta(1)) with polar sensor
   4:   2              Wind Speed/East Loc [ wnd_spd   ]
   5:   1              Wind Direction/North Loc [ wnd_dir   ]

10:  Totalize (P72)
   1:   1              Reps
   2:   4              Loc [ samples   ]

11:  If (X<=>F) (P89)
   1:   3              X Loc [ ws_diag   ]
   2:   1              =
   3:   1              F
   4:   29             Set Intermed. Proc. Disable Flag Low (Flag 9)

;Report the total of diag = 1.
;
12:  Totalize (P72)
   1:   1              Reps
   2:   4              Loc [ samples   ]

13:  If (X<=>F) (P89)
   1:   3              X Loc [ ws_diag   ]
   2:   1              =
   3:   2              F
   4:   29             Set Intermed. Proc. Disable Flag Low (Flag 9)

;Report the total of diag = 2.
;
14:  Totalize (P72)
   1:   1              Reps
   2:   4              Loc [ samples   ]

15:  If (X<=>F) (P89)
   1:   3              X Loc [ ws_diag   ]
   2:   1              =
   3:   4              F
   4:   29             Set Intermed. Proc. Disable Flag Low (Flag 9)

;Report the total of diag = 4.
;
16:  Totalize (P72)
   1:   1              Reps
   2:   4              Loc [ samples   ]
```

```
17:  If (X<=>F) (P89)
   1:   3            X Loc [ ws_diag   ]
   2:   1            =
   3:   8            F
   4:   29           Set Intermed. Proc. Disable Flag Low (Flag 9)

;Report the total of diag = 8.
;
18:  Totalize (P72)
   1:   1            Reps
   2:   4            Loc [ samples   ]

19:  If (X<=>F) (P89)
   1:   3            X Loc [ ws_diag   ]
   2:   1            =
   3:   9            F
   4:   29           Set Intermed. Proc. Disable Flag Low (Flag 9)

;Report the total of diag = 9.
;
20:  Totalize (P72)
   1:   1            Reps
   2:   4            Loc [ samples   ]

21:  If (X<=>F) (P89)
   1:   3            X Loc [ ws_diag   ]
   2:   1            =
   3:   10           F
   4:   29           Set Intermed. Proc. Disable Flag Low (Flag 9)

;Report the total of diag = 10.
;
22:  Totalize (P72)
   1:   1            Reps
   2:   4            Loc [ samples   ]

23:  If (X<=>F) (P89)
   1:   1            X Loc [ wnd_dir   ]
   2:   4            <
   3:   -99990       F
   4:   29           Set Intermed. Proc. Disable Flag Low (Flag 9)

;Report the total of samples of no wind.
;
24:  Totalize (P72)
   1:   1            Reps
   2:   4            Loc [ samples   ]

25:  Do (P86)
   1:   29           Set Intermed. Proc. Disable Flag Low (Flag 9)

*Table 2 Program
   01:  0.0000       Execution Interval (seconds)
```

```
*Table 3 Subroutines

End Program

-Input Locations-
1 wnd_dir
2 wnd_spd
3 ws_diag
4 samples
```

7.4.2 Example CR200(X) Datalogger Program for Measuring a WindSonic4

TABLE 7-11. Wiring for CR200(X) Program Example

Description	Color	CR200(X)
SDI-12 data	Green	C1/SDI-12
SDI-12 power	Red	+12 Vdc
SDI-12 reference	Black	G
Shield	Clear	G

```
'CR200(X) Series Datalogger

Public windsonic(3)
Alias windsonic(1) = wind_direction
Alias windsonic(2) = wind_speed
Alias windsonic(3) = diag
Units wind_direction = degrees
Units wind_speed = m/s
Units diag = unitless

Dim disable_flag
Dim one
Units one = samples

DataTable (stats,TRUE,-1)
  DataInterval (0,30,Min)

  WindVector (wind_speed,wind_direction,disable_flag,0,0)
  FieldNames ("mean_wnd_spd,mean_wnd_dir,std_wnd_dir")
  Totalize (1,one,disable_flag)
  FieldNames ("n_TOT")
  Totalize (1,one,diag<>1)
  FieldNames ("diag_1_TOT")
  Totalize (1,one,diag<>2)
  FieldNames ("diag_2_TOT")
  Totalize (1,one,diag<>4)
  FieldNames ("diag_4_TOT")
  Totalize (1,one,diag<>8)
  FieldNames ("diag_8_TOT")
  Totalize (1,one,diag<>9)
  FieldNames ("diag_9_TOT")
  Totalize (1,one,diag<>10)
  FieldNames ("diag_10_TOT")
```

```
  Totalize (1,one,diag<>NaN)
  FieldNames ("no_data_TOT")
EndTable

BeginProg
  one = 1
  Scan (1,Sec)
    SDI12Recorder (wind_direction,0R0!,1,0)
    If (wind_direction = NAN ) Then
      wind_speed = NAN
      diag = NAN
    EndIf
    disable_flag = (wind_direction=NAN) OR (diag<>0)

    CallTable stats
  NextScan
EndProg
```

7.4.3 Example CR800 Datalogger Program for Measuring a WindSonic4

TABLE 7-12. Wiring for CR800 Program Example

Description	Color	CR800
SDI-12 data	Green	C1
SDI-12 power	Red	+12 Vdc
SDI-12 reference	Black	G
shield	Clear	G

```
'CR800 Series Datalogger

Public windsonic(3)
Alias windsonic(1) = wind_direction
Alias windsonic(2) = wind_speed
Alias windsonic(3) = diag
Units wind_direction = degrees
Units wind_speed = m/s
Units diag = unitless

Dim disable_flag AS Boolean
Dim one
Units one = samples

DataTable (stats,TRUE,-1)
  DataInterval (0,30,Min,10)

  WindVector (1,wind_speed,wind_direction,IEEE4,disable_flag,0,0,0)
  FieldNames ("mean_wind_speed,mean_wind_direction,std_wind_dir")
  Totalize (1,one,IEEE4,disable_flag)
  FieldNames ("n_TOT")
  Totalize (1,one,IEEE4,diag<>1)
  FieldNames ("diag_1_TOT")
  Totalize (1,one,IEEE4,diag<>2)
  FieldNames ("diag_2_TOT")
  Totalize (1,one,IEEE4,diag<>4)
  FieldNames ("diag_4_TOT")
  Totalize (1,one,IEEE4,diag<>8)
  FieldNames ("diag_8_TOT")
  Totalize (1,one,IEEE4,diag<>9)
  FieldNames ("diag_9_TOT")
```

```
  Totalize (1,one,IEEE4,diag<>10)
  FieldNames ("diag_10_TOT")
  Totalize (1,one,IEEE4,diag<>NAN)
  FieldNames ("nnd_TOT")
EndTable

BeginProg
  one = 1
  Scan (1,Sec,3,0)
    SDI12Recorder (wind_direction,1,0,"R0!",1,0)
    If ( wind_direction = NAN ) Then
      wind_speed = NAN
      diag = NAN
    EndIf
    disable_flag =  (wind_direction=NAN) OR (diag<>0)

    CallTable stats
  NextScan
EndProg
```

7.5 Changing the SDI-12 Address Using LoggerNet and a Datalogger

Up to ten WindSonic4s or other SDI-12 sensors can be connected to a single datalogger control port. A datalogger can measure up to 4 WindSonic4 at 1 Hz. Each SDI-12 device must have a unique SDI-12 address between 0 and 9. The factory-set SDI-12 address for the WindSonic4 is 0. The WindSonic4 SDI-12 address is changed in software by issuing the ***a*A*b*!** command, where *a* is the current address and *b* is the new address, to the WindSonic4 over the SDI-12 interface. The current address can be found by issuing the **?!** command.

A computer running LoggerNet can be used to issue any valid SDI-12 command through the datalogger to the WindSonic4. For a complete list of SDI-12 commands supported by the WindSonic4, see Section 11 of the Gill WindSonic manual.

7.5.1 Array-Based Edlog Dataloggers

- Connect a single WindSonic4 to the datalogger using Control Port *p* as described in Section 7.2.3, *SDI-12 Wiring*, and download a datalogger program that contains the SDI-12 Recorder (Instruction 105) instruction with valid entries for each parameter.

- In the LoggerNet Toolbar, navigate to and activate the Test|Terminal Emulator … menu. The “Terminal Emulator” window will open. In the Select Device menu, located in the lower left hand side of the window, select the station.

- Click on the Open Terminal button. If communications between the datalogger and PC are successful, the red bar located in the upper left hand side of the window will turn green.

- Click inside the “Terminal Emulator” window and press the <enter> key until the datalogger responds with the “*” prompt (FIGURE 7-1).

- To activate the SDI-12 Transparent Mode, on Control Port *p*, enter *p*X and press the <enter> key. The datalogger will respond with "entering SDI-12". If any invalid SDI-12 command is issued, the datalogger will exit the SDI-12 Transparent Mode.
- To query the WindSonic4 for its current SDI-12 address, enter the command **?!**. The WindSonic4 will respond with the current SDI-12 address.
- To change the SDI-12 address, enter the command ***a*A*b*!**; where *a* is the current address from the above step and *b* is the new address. The WindSonic4 will change its address and the datalogger will exit the SDI-12 Transparent Mode.
- To activate the SDI-12 Transparent Mode on Control Port *p*, enter *p*X and press the <enter> key. Verify the new SDI-12 address by entering the "?!" command. The WindSonic4 will respond with the new address.
- To exit the SDI-12 Transparent Mode, enter ∗.

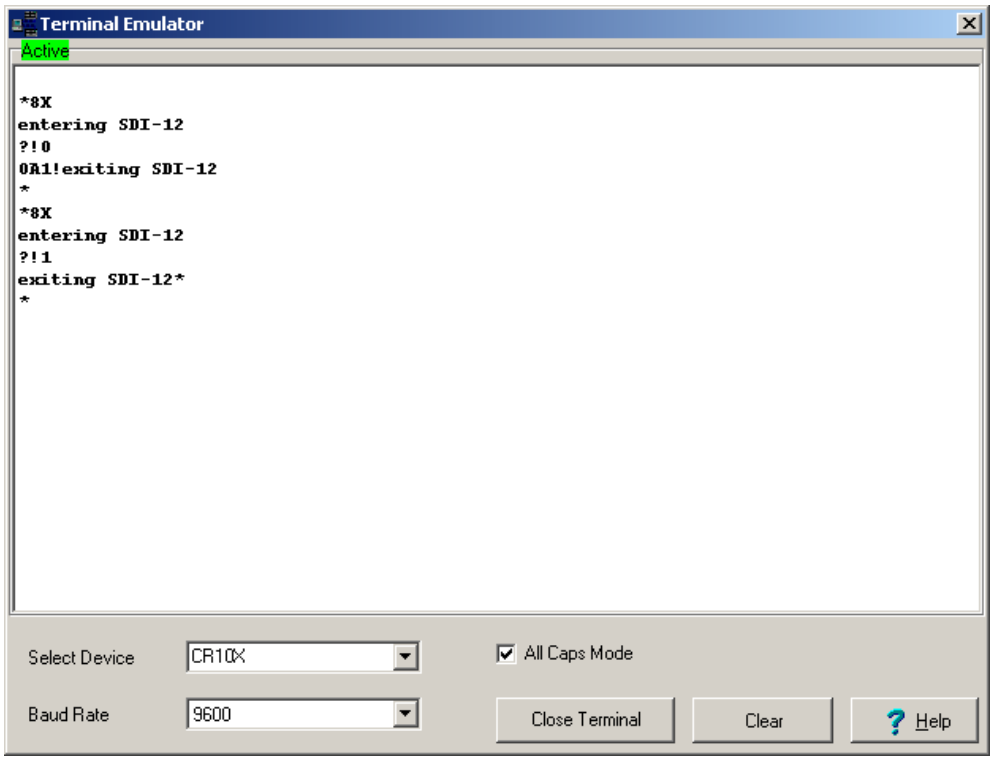

FIGURE 7-1. SDI-12 Transparent Mode on an Edlog array-based datalogger (CR10X) using control port 8 and changing the SDI-12 address from 0 to 1

7.5.2 Table-Based Edlog Dataloggers

- Connect a single WindSonic4 to the datalogger Control Port *p* as described in Section 7.2.3, *SDI-12 Wiring*, and download a datalogger program that contains the SDI-12 Recorder (Instruction 105) instruction with valid entries for each parameter.

- In the LoggerNet Toolbar, navigate to and activate the Test|Terminal Emulator … menu. The "Terminal Emulator" window will open. In the Select Device menu, located in the lower left hand side of the window, select the station.

- Click on the Open Terminal button. If communications between the datalogger and PC are successful, the red bar located in the upper left hand side of the window will turn green.

- Click inside the "Terminal Emulator" window and press the <enter> key until the datalogger responds with the ">" prompt (FIGURE 7-2).

- To activate the SDI-12 Transparent Mode, press the <enter> key a few times. The datalogger will respond with a ">" prompt. Enter *****# and wait for a datalogger response. It will respond with a "F0000" prompt. Finally, enter *p* (Control Port *p*) and press the <enter> key. The datalogger will respond with "entering SDI-12".

- To query the WindSonic for its current SDI-12 address, enter the command **?!**. The WindSonic4 will respond with the current SDI-12 address.

- To change the SDI-12 address, enter the command ***a*A*b*!**; where *a* is the current address from the above step and *b* is the new address. The WindSonic4 will change its address and the datalogger will exit the SDI-12 Transparent Mode.

- To activate the SDI-12 Transparent Mode again and check the address change, enter #8 and press the <enter> key. The datalogger will respond with "entering SDI-12". Verify the new SDI-12 address by entering the **?!** command. The WindSonic4 will respond with the new address.

- To exit the SDI-12 Transparent Mode, type in ∗ or press the <enter> key.

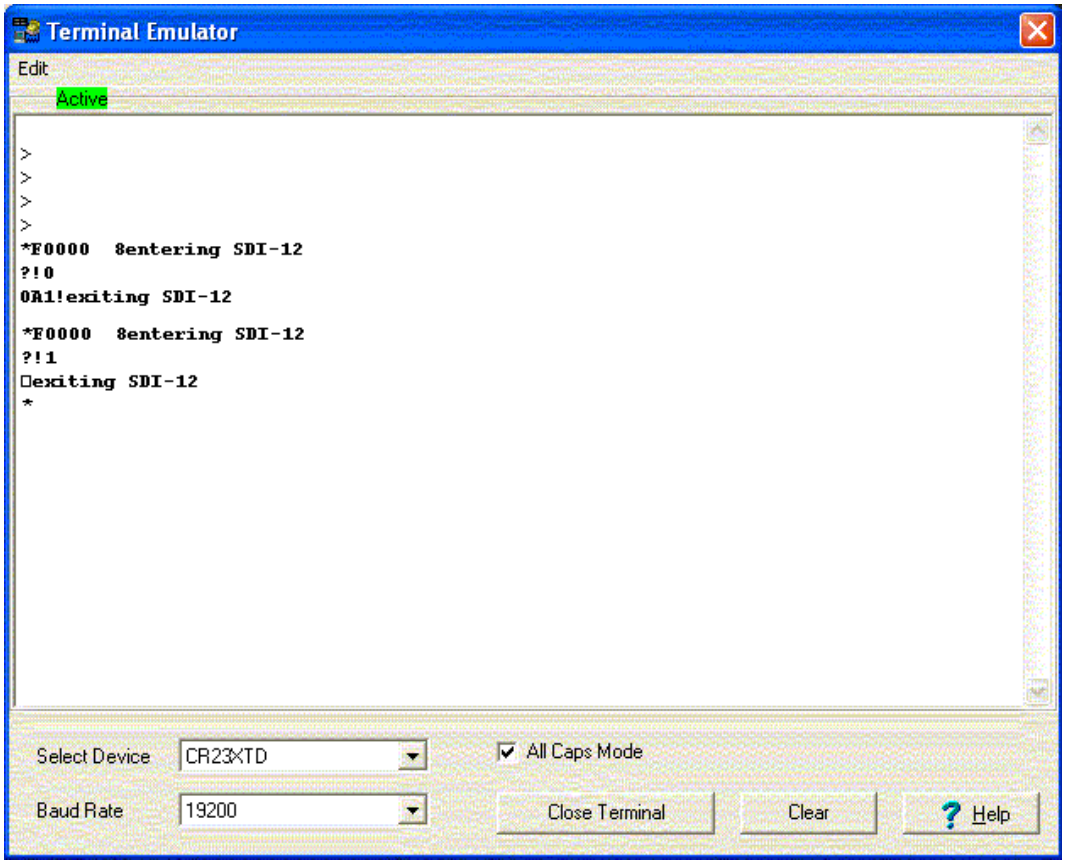

FIGURE 7-2. SDI-12 Transparent Mode on an Edlog table-based datalogger using control port 8 and changing the SDI-12 address from 0 to 1

7.5.3 CR200(X)-series Datalogger

- Connect a single WindSonic4 to the datalogger using Control Port C1/SDI12 as described in Section 7.2.3, *SDI-12 Wiring*, and download a datalogger program that does not contain the **SDI12Recorder()** instruction.

- In the LoggerNet Toolbar, navigate to and activate the Test|Terminal Emulator … menu. The "Terminal Emulator" window will open. In the Select Device menu, located in the lower left hand side of the window, select the station.

- Click on the Open Terminal button. If communications between the datalogger and PC are successful, the red bar located in the upper left hand side of the window will turn green.

- Press the <enter> key until the datalogger responds with the "CR200(X)>" prompt (FIGURE 7-3).

- To query the WindSonic4 for its current SDI-12 address, press the <enter> key, at the "CR200(X)>" prompt enter the command "SDI12>?!", and

press the <enter> key. The WindSonic4 will respond with the current SDI-12 address.

- To change the SDI-12 address, press the <enter> key, at the "CR200(X)>" prompt enter the command "SDI12>*a*A*b*!"; where *a* is the current address from the above step and *b* is the new address. The WindSonic4 will change its address and the datalogger will exit the SDI-12 Transparent Mode and respond with "Fail".

- Verify the new SDI-12 address. Press the <enter> key, at the "CR200(X)>" prompt enter the command "SDI12>?!" and press the <enter> key. The WindSonic4 will respond with the new address.

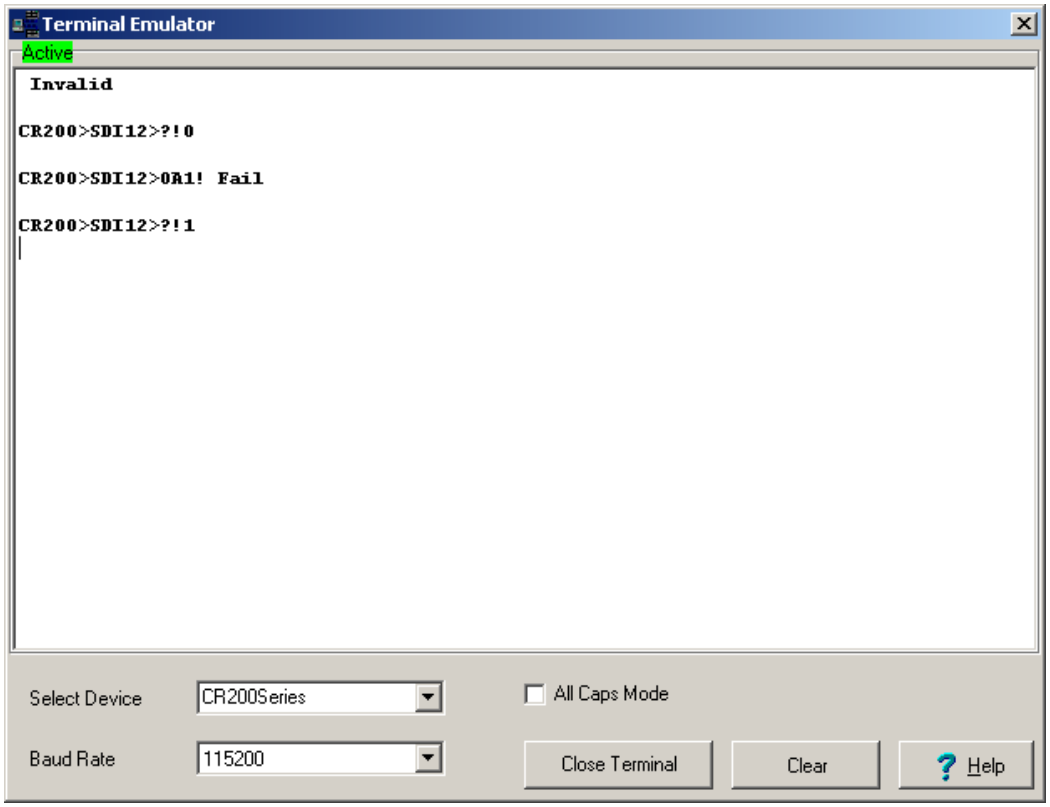

FIGURE 7-3. SDI-12 Transparent Mode on a CRBasic CR200(X)-series datalogger using control port C1/SDI12 and changing the SDI-12 address from 0 to 1

8. Maintenance

There are no user-serviceable parts on the WindSonic. Keep the transducer paths clear of any obstructions. When clearing the transducer paths, do not remove or damage the transducer matching layer. The transducers can be gently cleaned with a cloth and mild detergent. Do no use solvents and avoid scratching or damaging the matching layers. The transducer's matching layers are the "rubber" caps on each of the transducers. Should the WindSonic be damaged, fail to output data, or send a nonzero diagnostic, return it for repair

(refer to the Assistance section at the beginning of this manual for the process of returning a product to Campbell Scientific). For more information, see Section 12, *Maintenance and Fault-Finding*, in the manual published by Gill Instruments.

9. Diagnostic Codes

The WindSonic outputs a diagnostic (TABLE 9-1) along with each wind direction and speed measurement. The example datalogger programs in this manual filter all data when the diagnostic is not 0. Short generated programs do not filter data based on the WindSonic diagnostic. Both the example programs in this manual and those generated in SCWin record the number of times an error flag was set. If the WindSonic is not powered, not connected, is using the wrong COM port/SDI-12 address, or has missed a sample, the example programs in this manual will load NaN or -99999 for wind direction and speed, and the diagnostic (TABLE 9-2). The programs also report the number of good samples that were used in computing the online statistics. If the total number of good samples is less than 98% of the expected samples, the WindSonic may be in need of repair.

TABLE 9-1. Gill WindSonic Diagnostic Codes

Diagnostic	Status	Comment
0	Okay	All okay
1	Axis 1 Failed	Insufficient samples, possible path obstruction
2	Axis 2 Failed	Insufficient samples, possible path obstruction
4	Both Axis Failed	Insufficient samples, possible path obstruction
8	NVM error	Nonvolatile Memory checksum failed
9	ROM error	Read Only Memory checksum failed
10	Maximum Gain	Questionable wind measurements

TABLE 9-2. Example Datalogger Program Diagnostic Codes

Diagnostic	Datalogger Type	Comment
NaN	CRBasic	WindSonic not powered, not connected, wrong COM port/SDI-12 address, or missed sample
–99999	Edlog	WindSonic not powered, not connected, wrong SDI-12 address, or missed sample

10. Siting References

The following references give detailed information on siting wind direction and wind speed sensors.

EPA, 1987: *On-Site Meteorological Program Guidance for Regulatory Modeling Applications,* EPA-450/4-87-013, Office of Air Quality Planning and Standards, Research Triangle Park, NC, 27711.

EPA, 1989: *Quality Assurance Handbook for Air Pollution Measurements System*, Office of Research and Development, Research Triangle Park, NC, 27711.

The State Climatologist, 1985: *Publication of the American Association of State Climatologists: Height and Exposure Standards, for Sensors on Automated Weather Stations*, vol. 9, No. 4.

WMO, 1983: *Guide to Meteorological Instruments and Methods of Observation,* World Meteorological Organization, No. 8, 5th edition, Geneva, Switzerland.

Appendix A. WindSonic Orientation

A.1 Determining True North and Sensor Orientation

The orientation of the WindSonic "North Arrow Markers" is found by reading a magnetic compass and applying the site-specific correction for magnetic declination; where the magnetic declination is the number of degrees between True North and Magnetic North. Magnetic declination for a specific site can be obtained from a USGS map, local airport, or through a NOAA web calculator (Section A.2). A general map showing magnetic declination for the Conterminous United States in 2004 is shown in FIGURE A-1.

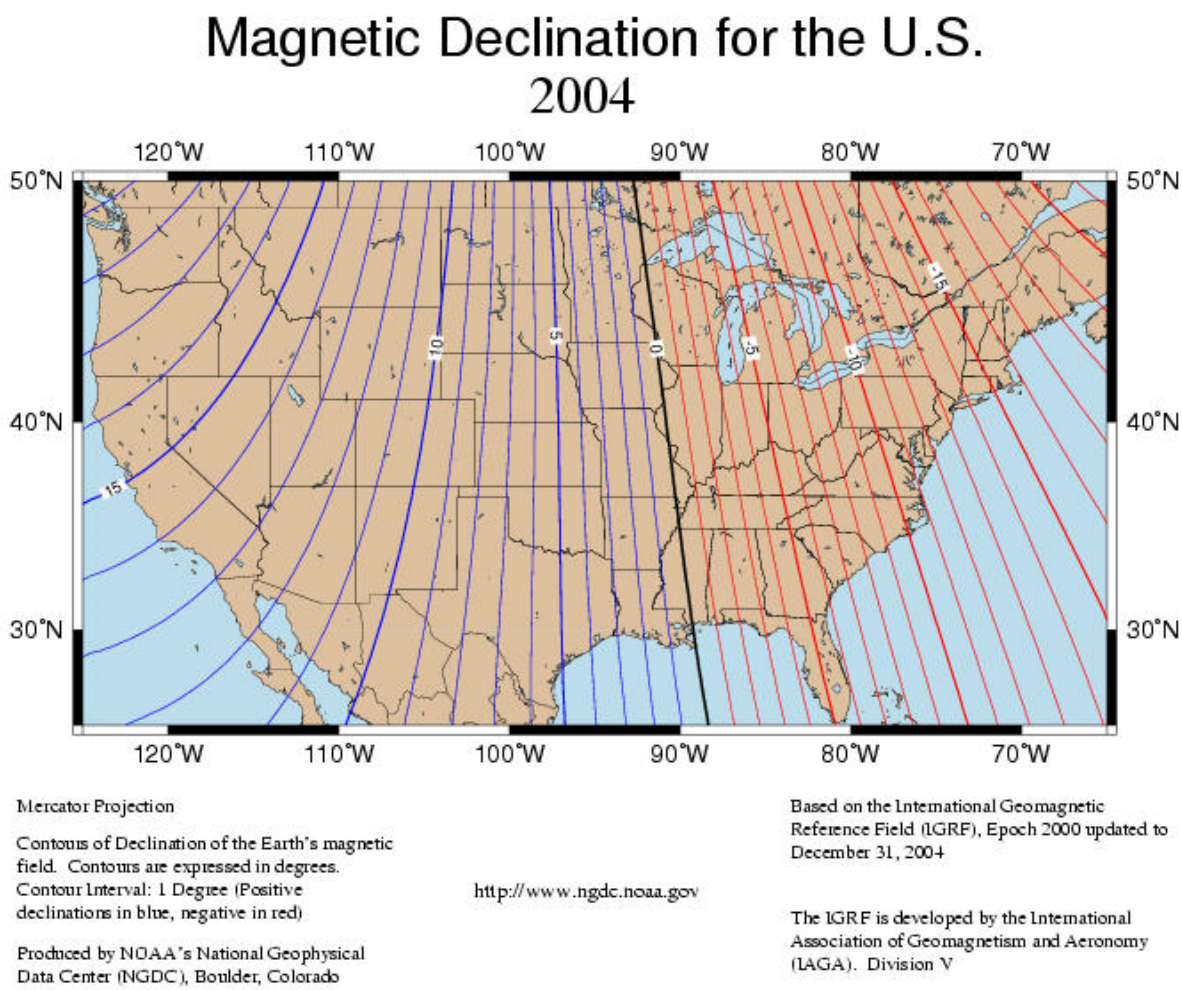

FIGURE A-1. Magnetic declination for the conterminous United States (2004)

Declination angles east of True North are considered negative, and are subtracted from 360 degrees to get True North as shown FIGURE A-2 (0° and 360° are the same point on a compass). Declination angles west of True North are considered positive, and are added to 0 degrees to get True North as shown in FIGURE A-3.

For example, the declination for Longmont, CO (10 June 2006) is 9.67°, thus True North is 360° − 9.67°, or 350.33° as read on a compass. Likewise, the declination for McHenry, IL (10 June 2006) is −2.68°, and True North is 0° − (−2.68°), or 2.68° as read on a compass.

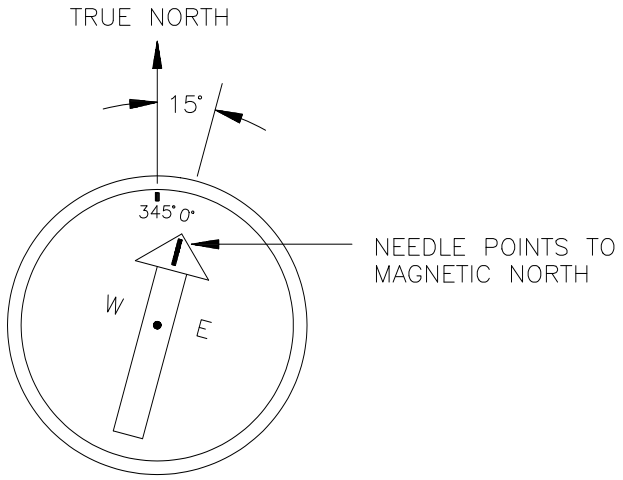

FIGURE A-2. A declination angle east of True North (positive) is subtracted from 360 (0) degrees to find True North

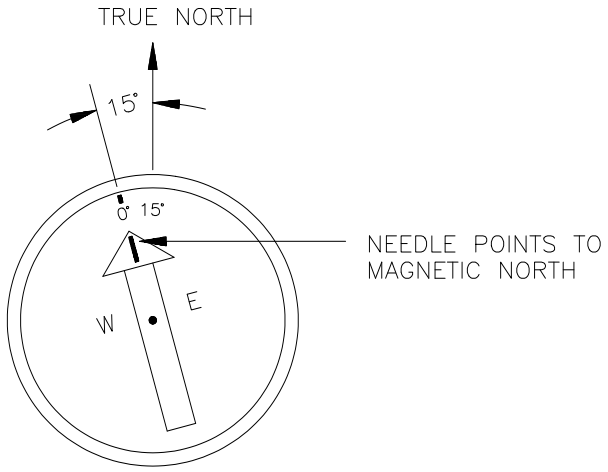

FIGURE A-3. A declination angle west of True North (negative) is subtracted from 0 (360) degrees to find True North

A.2 Online Magnetic Declination Calculator

The magnetic declination calculator web calculator published by NOAA's Geophysical Data Center is available at the following url: *www.ngdc.noaa.gov/geomagmodels/Declination.jsp*. After the web page loads, enter the site zip code, or longitude and latitude, then click on the "Compute Declination" button (FIGURE A-4).

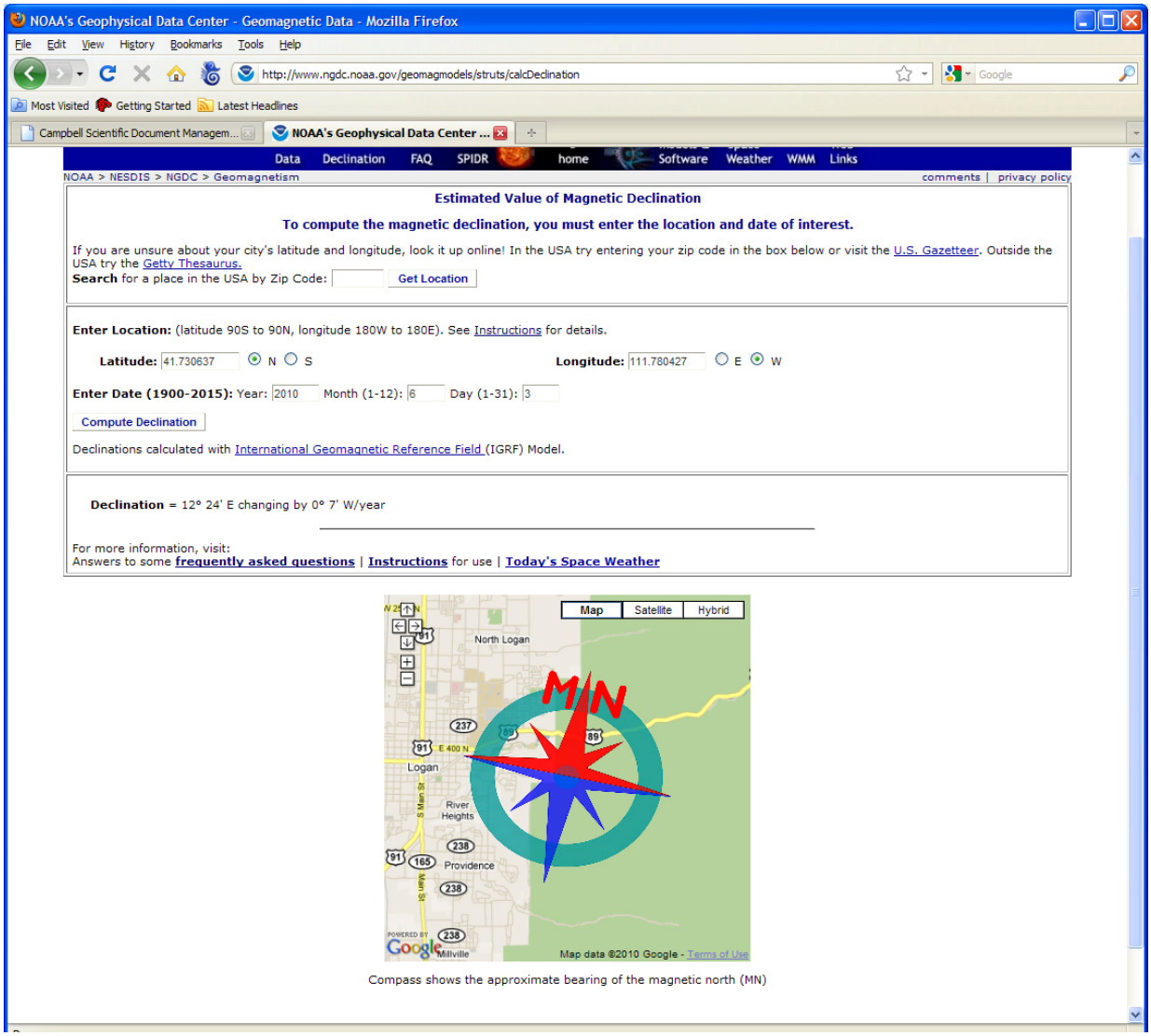

FIGURE A-4. NOAA web calculator

The declination for Logan, UT is 12.4 degrees (3 June 2010). As shown in FIGURE A-4, the declination for Utah is positive (east of north), so True North for this site is 360 – 12.4, or 347.6 degrees. The annual change is –7 minutes/year or 7 minutes west per year.

Appendix B. Updating an Older Program for Measuring a WindSonic1 With the New Settings

In February 2013, the settings of the WindSonic1 sensor were changed to improve operation in cold temperatures. The communication baud rate has been changed from 38,400 to 9600 baud, and the data output structure has been changed to the manufacturer's default. Section 6.4, *Campbell Scientific Factory Default Settings for the WindSonic1*, lists the newer default settings.

Sensors with the new settings can be identified by a small white painted dot next to the connector on the underside of the sensor. New sensor cables include both a yellow and white heat shrink label; older sensor cables had two white heat shrink labels. Because cables are interchangeable between new and old sensors, the best check is to look for the painted dot.

CAUTION Sensors with newer settings will NOT work with older programs written for sensors set to 38,400 baud or Short Cut version 3.0 or older.

Older WindSonic1 programs can be changed by using CRBasic Editor or by cutting and pasting relevant sections from the updated manual. For additional support, contact Campbell Scientific at (435) 227-9000 or email support@campbellsci.com.

Programming examples shown below come from the old and new WindSonic manuals. Programs are not complete, but show the relevant sections to be changed.

Old CR1000 Program (Section 6.1 of 7/10 WindSonic manual)

(Public variables change. Data table structure stays the same.)

```
Public windsonic(4)
Alias windsonic(1) = wind_direction
Alias windsonic(2) = wind_speed
Alias windsonic(3) = diag
Alias windsonic(4) = nmbr_bytes_rtrnd
Units wind_direction = degrees
Units wind_speed = m/s
Units diag = unitless
Dim in_bytes_str As String * 21
Dim checksum_flg As Boolean
Dim disable_flg As Boolean
Dim n
Units n = arb
BeginProg
    n = 1
    SerialOpen (Com1,38400,3,0,49)
    Scan (1,Sec,3,0)
      SerialInRecord (Com1,in_bytes_str,&h02,0,&h0D0A,nmbr_bytes_rtrnd,00)
      wind_direction = Mid (in_bytes_str,3,3)
      wind_speed = Mid (in_bytes_str,7,6)
      diag = Mid (in_bytes_str,16,2)
      checksum_flg = ( (HexToDec (Mid (in_bytes_str,20,2))) EQV (CheckSum(in_bytes_str,9,18)) )
      disable_flg = (NOT (checksum_flg) OR (nmbr_bytes_rtrnd=0) OR (diag<>0))
```

New CR1000 Program (Section 7.3.1)

(Public variables change. Data table structure stays the same.)

```
Dim windsonic(4) As String
Public wind_direction
Public wind_speed
Public diag
Public nmbr_bytes_rtrnd
Units wind_direction = degrees
Units wind_speed = m/s
Units diag = unitless
Dim in_bytes_str As String * 21
Dim checksum_flg As Boolean
Dim disable_flg As Boolean
Dim n
Units n = arb
BeginProg
    n = 1
    SerialOpen (Com1,9600,3,0,105)
     Scan (1,Sec,3,0)
      'Get data from WindSonic.
      SerialInRecord (Com1,in_bytes_str,&h02,0,&h0D0A,nmbr_bytes_rtrnd,01)
      SplitStr (windsonic(),in_bytes_str,",",4,4) 'Split the string and convert to floats.
      wind_direction = windsonic(1)
      wind_speed = windsonic(2)
      diag = windsonic(4)
      checksum_flg = ( (HexToDec (Right (in_bytes_str,2))) EQV (CheckSum (in_bytes_str,9,Len (in_bytes_str)-3)) )
      disable_flg = ( NOT (checksum_flg) OR (nmbr_bytes_rtrnd=0) OR(diag<>0) )
```

Old CR1000 SDM-SIO1 Program (Section 6.2 of 7/10 WindSonic manual)

(Public variables change. Data table structure stays the same.)

```
Public windsonic(4)
Alias windsonic(1) = wind_direction
Alias windsonic(2) = wind_speed
Alias windsonic(3) = diag
Alias windsonic(4) = nmbr_bytes_rtrnd
Units wind_direction = degrees
Units wind_speed = m/s
Units diag = unitless
Dim in_bytes_str As String * 21
Dim checksum_flg As Boolean
Dim disable_flg As Boolean
Dim n
Units n = arb
  BeginProg
    n = 1
    SerialOpen (40,38400,3,0,49) ‘SDM-SIO1 SDM address set to 8.
    Scan (1,Sec,3,0)
      'Get data from WindSonic.
      SerialInRecord (40,in_bytes_str,&h02,0,&h0D0A,nmbr_bytes_rtrnd,00)
      wind_direction = Mid (in_bytes_str,3,3)
      wind_speed = Mid (in_bytes_str,7,6)
      diag = Mid (in_bytes_str,16,2)
      checksum_flg = ( (HexToDec (Mid (in_bytes_str,20,2))) EQV (CheckSum(in_bytes_str,9,18)) )
      disable_flg = (NOT (checksum_flg) OR (nmbr_bytes_rtrnd=0) OR (diag<>0))
```

New CR1000 SDM-SIO1 Program (from Section 7.3.2)

(Public variables change. Data table structure stays the same.)

```
Dim windsonic(4) As String
Public wind_direction
Public wind_speed
Public diag
Public nmbr_bytes_rtrnd
Units wind_direction = degrees
Units wind_speed = m/s
Units diag = unitless
Dim in_bytes_str As String * 21
Dim checksum_flg As Boolean
Dim disable_flg As Boolean
Dim n
Units n = arb
BeginProg
    n = 1
    SerialOpen (40,9600,3,0,105) 'SDM-SIO1 SDM address set To 8.
    Scan (1,Sec,3,0)
      'Get data from WindSonic.
      SerialInRecord (40,in_bytes_str,&h02,0,&h0D0A,nmbr_bytes_rtrnd,01)
      SplitStr (windsonic(),in_bytes_str,",",4,4) 'Split the string and convert to floats.
      wind_direction = windsonic(1)
      wind_speed = windsonic(2)
      diag = windsonic(4)
      checksum_flg = ( (HexToDec (Right (in_bytes_str,2))) EQV (CheckSum(in_bytes_str,9,Len (in_bytes_str)-3)) )
      disable_flg = ( NOT (checksum_flg) OR (nmbr_bytertrnd=0) OR (diag<>0) )
```

Campbell Scientific Companies

Campbell Scientific, Inc. (CSI)
815 West 1800 North
Logan, Utah 84321
UNITED STATES
www.campbellsci.com • info@campbellsci.com

Campbell Scientific Africa Pty. Ltd. (CSAf)
PO Box 2450
Somerset West 7129
SOUTH AFRICA
www.csafrica.co.za • cleroux@csafrica.co.za

Campbell Scientific Australia Pty. Ltd. (CSA)
PO Box 8108
Garbutt Post Shop QLD 4814
AUSTRALIA
www.campbellsci.com.au • info@campbellsci.com.au

Campbell Scientific do Brasil Ltda. (CSB)
Rua Apinagés, nbr. 2018 ─ Perdizes
CEP: 01258-00 ─ São Paulo ─ SP
BRASIL
www.campbellsci.com.br • vendas@campbellsci.com.br

Campbell Scientific Canada Corp. (CSC)
11564 - 149th Street NW
Edmonton, Alberta T5M 1W7
CANADA
www.campbellsci.ca • dataloggers@campbellsci.ca

Campbell Scientific Centro Caribe S.A. (CSCC)
300 N Cementerio, Edificio Breller
Santo Domingo, Heredia 40305
COSTA RICA
www.campbellsci.cc • info@campbellsci.cc

Campbell Scientific Ltd. (CSL)
Campbell Park
80 Hathern Road
Shepshed, Loughborough LE12 9GX
UNITED KINGDOM
www.campbellsci.co.uk • sales@campbellsci.co.uk

Campbell Scientific Ltd. (France)
3 Avenue de la Division Leclerc
92160 ANTONY
FRANCE
www.campbellsci.fr • info@campbellsci.fr

Campbell Scientific Spain, S. L.
Avda. Pompeu Fabra 7-9, local 1
08024 Barcelona
SPAIN
www.campbellsci.es • info@campbellsci.es

Please visit www.campbellsci.com to obtain contact information for your local US or international representative.